COMMON COUNCIL *(04/11)*
of the
CITY OF SYRACUSE

REGULAR MEETING – APRIL 11, 2022

1:00 P.M.

1. *Pledge of Allegiance to the Flag – (Led by the Hon. Helen Hudson, President of the Syracuse Common Council)*

2. *Invocation – (Delivered by Rabbi Yaakov T. Rapoport, Director of Chabad of CNY and Senior Rabbi of Chabad House SU)*

3. *Roll Call – (Present – 8; Councilor Caldwell – Absent)*

4. *Minutes – March 28, 2022 – (Adopted 8-0)*

5. *Public Hearing – "Relative to Item #29, "Application – To the US Department of Housing and Urban Development for the 2022-2023 (Year 48) Third Annual Action Plan: Community Development Block Grant (CDBG) ($5,158,048) HOME Investment Partnership Grant (HOME) ($1,476,482) Emergency Solutions Grant (ESG) ($431,664). Housing Opportunities for Person with AIDS (HOPWA) $412,909" (Public Hearing was held on Wednesday, April 6, 2022, at 5:30 P.M.) (Beatrice Faid, Salina Fasulo Walt Dixie, Andrea Wandersea, Joan Royal, Brian Fay, Gregory Dewan, Kerry Quaglia, Sally Curran, Rich Puchalski, Bob Sekawski April English, Larry Fuller, Nicky Trice, Sharon Sherman)*

6. *Petitions – (From SEUNA signed by 82 City of Syracuse residents asking the City of Syracuse to take preventative action for pedestrian, cyclist and driver safety regarding speeding on Lancaster Avenue)*

7. *Committee Reports – (Neighborhood Preservation; Public Safety)*

8. *Communications – (From the Honorable William B. Magnarelli, NYS Assemblyman, a letter acknowledging receipt of Syracuse Common Council Resolution No. 11-R 2022; From the Honorable William B. Magnarelli, NYS Assemblyman, a letter acknowledging receipt of Syracuse Common Council Resolution No. 12-R 2022; From Andrea Burdick, with Empire State Development, the General Project Plan, together with findings, for the NY First SUNY Upstate Medical Capital Project in Onondaga County; From Mark Hall, with Syracuse Community Health Center, a letter acknowledging and accepting permission and consent contained in Special Ordinance No. 68-2022; From David C. Warren, with Syracuse University Campus Planning, Design & Construction, acknowledging and accepting permission and consents contained in Special Ordinance No. 43-2021)*

NEW BUSINESS

BY PRESIDENT HUDSON:

	9.	*Resolution – Approving the Appointment of Various Persons as Commissioners of Deeds for 2021/2022.*	
WD			**WD**

BY COUNCILOR CALDWELL:

	10.	*Accept – From Central New York Community Foundation, a donation from an anonymous donor in an amount not to exceed $6,000, on behalf of the Department of Parks, Recreation & Youth Programs, to purchase meals at Hersheypark and healthy meals from local vendors for coordinated food pop up events in our parks.*	
8-0			**148**
	11.	*Agreement – With Cumulus Media, to provide services valued at $7,600 for on-air promotions, on behalf of the Department of Parks, Recreation & Youth Programs, to advertise 100 gift certificates for golf passes ($6,000) during the 2022 Golf Season.*	
H			**H**
	12.	*Agreement – With the Haven at Skanda, to provide educational and hands-on learning experiences to City youth from various community centers at their farm location. The Haven will teach our youth how to pet, groom, feed, and care for their rescue animals. The City will provide transportation. Total cost not to exceed $1,800, to be charged to Account 01.71400.541500.*	
8-0			**149**
	13.	*Authorize – Payment to RecDesk LLC, for surcharges on revenue processed between February 1, 2021-January 31, 2022, on behalf of the Department of Parks, Recreation & Youth Programs. Total cost not to exceed $525 to be charged to Account #01.71400.540530.*	
8-0			**150**
	14.	*Authorize – Payment to Michael Lawler, for providing balloon art for Big Rig Day at Burnet Park, May 14, 2022. Total cost not to exceed $250 from Account #5046100 Fund #25 and the remaining balance from Account #01.71400.540552.*	
8-0			**151**
	15.	*Authorize – Payment to Blake Propst, for a performance at the 2022 Rose Day at Thornden Park on June 15th on behalf of the Department of Parks, Recreation & Youth Programs. Total cost not to exceed $300 to be charged to Account #01.71400.540552.*	
8-0			**152**
	16.	*Waiver of Residency – As set forth in Section 8-112(2) of the Charter of the City of Syracuse – 1960, as amended, to authorize the Department of Parks, Recreation & Youth Programs to waive the residency requirement to hire up to one hundred (100) lifeguards that are non-city residents, during the 2022 Summer Season.*	
8-0			**153**

17. *Waiver of Residency – As set forth in Section 8-112(2) of the Charter of the City of Syracuse – 1960, as amended, to authorize the Department of Parks, Recreation & Youth Programs to waive the residency requirement to hire employees from the SCSD who resides outside the City to work and lead the summer youth programming, during the 2022 Summer.*

H ***H***

BY COUNCILOR GREENE:

18. *Agreement – With the City and Crouse-Marshall Business Improvement District to split 50/50 in the replacement of street scape amenities, as detailed in the legislation, for the period of five (5) years, from July 1, 2022-June 30, 2027. Total cost not to exceed $25,000 annually. The City portion ($12,500) will be charged to Account #595912.01.90000.*

8-0 ***154***

19. *Agreement – With MultiMed Billing Service Inc., on behalf of the Department of Finance, for ambulance billing and account receivable services, relative to the Fire Department ambulance transport services, as detailed in the legislation, for the period of twelve months (12) months. Total cost not to exceed $75,000, from Account #01.541500.34100. The Mayor has waived the RFP process.*

8-0 ***155***

20. *Approve – Settlement of Tax Certiorari Proceedings – Baruch Lincoln, LLC vs The City of Syracuse, et al. – 110 West Fayette Street (Tax Map No.:104.-27-03.0), relative to assessed value – Tax Years 2021/2022.*

8-0 ***156***

21. *Approve – Settlement of Tax Certiorari Proceedings – COR West Kirkpatrick Street Company, LLC vs The City of Syracuse, et al. – 310 Kirkpatrick Street West (Tax Map No.:117.-01-10.1), relative to assessed value – Tax Years 2021/2022.*

8-0 ***157***

22. *Approve – Settlement of Tax Certiorari Proceedings – 95 NYRPT, LLC and FBBT/US Properties, LLC, vs The City of Syracuse, et al. – 612 Second North Street (Tax Map No.:003.-12-22.0), relative to assessed value – Tax Years 2016/2017, 2017/2018, 2018/2019, 2019/2020, 2020/2021, 2021/2022, 2022/2023.*

8-0 ***158***

23. *Authorize – The Department of Finance to waive the Delinquent Tax Bills for 700 Geddes Street LLC, owner of the properties located at 700-716 South Geddes Street, for the tax period of 2018/2019, 2019/2020, 2020/2021, 2021/2022, which was acquired through foreclosure from the City in 2019, as part of the City "Brownfield Lien Sale" Program. Total amount not to exceed $12,375.38.*

8-0 ***159***

24. *Authorize – The Department of Finance to waive the Delinquent Tax Bills for North Area Athletic Club Inc., owner of properties located at 301-303 South Geddes Street, for the tax period of 2018/2019, 2019/2020, 2020/2021, 2021/2022, which was acquired through foreclosure from the City in 2019, as part of the City "Brownfield Lien Sale" Program. Total amount not to exceed $13,934.42.*

8-0 ***160***

25. *Purchase w/c/b – Agreement with Naviant, to act as a third-party provider for various software and technology services, for renewals and purchases of additional software or technology services, on behalf of the Office of Information and Technology, for a term to expire June 30, 2025. Total cost not to exceed $300,000, to be charged to Accounts #200862022 and #540530.*

8-0 ***161***

BY COUNCILOR PANIAGUA:

26. *Local Law – Of the City of Syracuse to amend the July 1, 2020–June 30, 2021 City Budget to reflect the salary increase pursuant to a Labor Agreement between the City of Syracuse and the CSEA Unit 7801-00.*

WD ***WD***

27. *Approve – Labor Agreement between the City of Syracuse and CSEA Unit 7801-00 for the period of January 1, 2021 – December 31, 2025. Effective 1/1/21 3% general wage increase, 1/1/22 3% general wage increase, 1/1/23 3% general wage increase, 1/1/24 3% general wage increase, and 1/1/25 3% general wage increase. Other terms and conditions are detailed in the contract.*

WD ***WD***

28. *Local Law – Of the City of Syracuse to amend the July 1, 2020–June 30, 2021City Budget to reflect the salary increase pursuant to a Labor Agreement between the City of Syracuse and AFSCME Local 400.*

T ***T***

29. *Approve – Labor Agreement between the City of Syracuse and AFSCME Local 400, for the period of January 1, 2021 – December 31, 2025. Effective 1/1/21 3% general wage increase, 1/1/22 3% general wage increase, 1/1/23 3% general wage increase, 1/1/24 3% general wage increase, and 1/1/25 3% general wage increase. Other terms and conditions are detailed in the contract.*

H ***H***

BY COUNCILOR HOGAN:

30. *Application – To the US Department of Housing and Urban Development for the 2022-2023 (Year 48) Third Annual Action Plan: Community Development Block Grant (CDBG) ($5,158,048) HOME Investment Partnership Grant (HOME) ($1,476,482) Emergency Solutions Grant (ESG) ($431,664). Housing Opportunities for Person with AIDS (HOPWA) $412,909. (Public Hearing was held on Wednesday, April 6, 2022 at 5:30 P.M.)*

H ***H***

BY COUNCILOR MAJOK:

31. *Appropriate Funds – From the American Rescue Plan Act of 2021 (ARPA) in an amount not to exceed $257,000 and enter into an agreement with Liberty Resources, Inc, to work in collaboration with the Syracuse Police Department (911) to provide Mobile Crisis Response Services, to persons in crisis, exhibiting mental health and/or substance abuse related behaviors, to deploy mental health professionals to the scene of an incident resulting from a call to and dispatch of law enforcement from a 911 center. There is a 10% administrative fee. The Mayor waived the RFP process.*

8-0 ***162***

32. *Accept – From Syracuse University, a donation in the amount of $6,500, to pay for the cost of overtime required to provide a hazardous materials team to monitor the atmosphere inside the Dome during the Monster Truck Show, April 16, 2022. Funds will be deposited into Account #01.415380.*

8-0 **163**

33. *Amend – Ord. #424, (07/12/2021), "Agreement – With Mohawk Valley Information Technologies, Inc., for information technology professional services to support maintenance and development of the Police Department's public website, from July 1, 2021-June 30, 2022. Total cost not to exceed $2,500, from Account #541500.01.31230. The Mayor waived the RFP Process". Amend to increase the total cost not to exceed from $2,500 to $4,000.*

8-0 **164**

BY COUNCILOR ALLEN:

34. *Application & Agreement – To and with the NYS Department of Parks, Recreation & Historic Preservation – Certified Local Government Program, in an amount not to exceed $30,000, on behalf of the Division of City Planning, to support the 2022 New York Statewide Preservation Conference, during the Fall of 2022. Funds will be used for conference scholarships, venue costs, audio/visual expenses and keynote speaker fees, administered by Landmark Society of WNY.*

8-0 **165**

35. *Permission – To Addis Building, LLC, owner of the property located at 449-453 South Salina Street to encroach approximately 9.5' for a blade sign into the South Salina Street right-of-way.*

8-0 **166**

36. *Sell – All right, title and interest of the City of Syracuse in and to the premises known as 116 Berger Avenue, a wood house & garage, to the Greater Syracuse Property Development Corporation for the total sum of $151. (District 3)*

8-0 **167**

37. *Sell – All right, title and interest of the City of Syracuse in and to the premises known as 118 Berger Avenue, a wood house & garage, to the Greater Syracuse Property Development Corporation for the total sum of $151. (District 3)*

8-0 **168**

38. *Sell – All right, title and interest of the City of Syracuse in and to the premises known as 130 Berger Avenue, a wood house, to the Greater Syracuse Property Development Corporation for the total sum of $151. (District 3)*

8-0 **169**

39. *Sell – All right, title and interest of the City of Syracuse in and to the premises known as 131 Berger Avenue, a wood house & garage, to the Greater Syracuse Property Development Corporation for the total sum of $151. (District 3)*

8-0 **170**

40. *Sell – All right, title and interest of the City of Syracuse in and to the premises known as 630 Catherine Street, a wood house, to the Greater Syracuse Property Development Corporation for the total sum of $151. (District 1)*

8-0 **171**

41. *Sell – All right, title and interest of the City of Syracuse in and to the premises known as 230 Cleveland Avenue, a wood house, to the Greater Syracuse Property Development Corporation for the total sum of $151. (District 1)*

8-0 **172**

H	*42.*	*Sell – All right, title and interest of the City of Syracuse in and to the premises known as 258-260 Crescent Avenue, a wood house & garage, to the Greater Syracuse Property Development Corporation for the total sum of $151. (District 4)*	***H***
8-0	*43.*	*Sell – All right, title and interest of the City of Syracuse in and to the premises known as 1029 Danforth Street, a wood house & garage, to the Greater Syracuse Property Development Corporation for the total sum of $151. (District 1)*	***173***
8-0	*44.*	*Sell – All right, title and interest of the City of Syracuse in and to the premises known as 125 John Street, a wood house & garage, to the Greater Syracuse Property Development Corporation for the total sum of $151. (District 1)*	***174***
8-0	*45.*	*Sell – All right, title and interest of the City of Syracuse in and to the premises known as 148 John Street, a wood house, to the Greater Syracuse Property Development Corporation for the total sum of $151. (District 1)*	***175***
WD	*46.*	*Sell – All right, title and interest of the City of Syracuse in and to the premises known as 102 Landon Avenue, a wood house & garage, to the Greater Syracuse Property Development Corporation for the total sum of $151. (District 4)*	***WD***
8-0	*47.*	*Sell – All right, title and interest of the City of Syracuse in and to the premises known as 2229 Lodi Street & Danforth Street, a wood house, to the Greater Syracuse Property Development Corporation for the total sum of $151. (District 2)*	***176***
8-0	*48.*	*Sell – All right, title and interest of the City of Syracuse in and to the premises known as 2513 Lodi Street, a wood house, to the Greater Syracuse Property Development Corporation for the total sum of $151. (District 2)*	***177***
8-0	*49.*	*Sell – All right, title and interest of the City of Syracuse in and to the premises known as 1105 McBride Street North, a wood house, to the Greater Syracuse Property Development Corporation for the total sum of $151. (District 2)*	***178***
H	*50.*	*Sell – All right, title and interest of the City of Syracuse in and to the premises known as 118-120 McClure Avenue, a wood house, to the Greater Syracuse Property Development Corporation for the total sum of $151. (District 4)*	***H***
8-0	*51.*	*Sell – All right, title and interest of the City of Syracuse in and to the premises known as 105 Murray Avenue, a wood house & garage, to the Greater Syracuse Property Development Corporation for the total sum of $151. (District 2)*	***179***
8-0	*52.*	*Sell – All right, title and interest of the City of Syracuse in and to the premises known as 605-607 Oneida Street, a vacant lot, to the Greater Syracuse Property Development Corporation for the total sum of $151. (District 4)*	***180***
8-0	*53.*	*Sell – All right, title and interest of the City of Syracuse in and to the premises known as 215 Pattison Street, a wood house & garage, to the Greater Syracuse Property Development Corporation for the total sum of $151. (District 1)*	***181***

54. *Sell – All right, title and interest of the City of Syracuse in and to the premises known as 1426 State Street North & Danforth Street, a wood house, to the Greater Syracuse Property Development Corporation for the total sum of $151. (District 2)*

8-0 **182**

BY COUNCILOR DRISCOLL:

55. *Bond Ordinance – Authorizing the issuance and sale of bonds of the City of Syracuse to defray the cost of the 2021/2022 Radar Sign Program. Total amount not to exceed $30,000.*

H **H**

56. *Authorize – The 2021/2022 Radar Sign Program, on behalf of the D.P.W. The funds will be used to purchase and install new stationary radar equipment in School Zones to help in vehicle speed reduction. Total cost not to exceed $30,000.*

H **H**

57. *Agreement – With JMT of New York Inc., for the scoping, design, and construction and inspection phases of the Lodi Street Striping Project, PIN 3950.72, on behalf of the D.P.W, for a period of two (2) years from the date of execution. Total cost not to exceed $122,000, relative to a previously approved legislation.*

H **H**

58. *Amend – Ord. #280 (06/07/2021), "Bond Ordinance – Authorizing the issuance and sale of bonds of the City of Syracuse to defray the cost of the scoping, preliminary design phases and the detail design phase of the East Colvin Street Paving Project, Salina Street S. to Jamesville Avenue, PIN 3756.82. Total amount not to exceed $475,000." Amend to add the Construction and Construction Inspection Phase and increase by $3,085,000. Total amount not to exceed $3,560,000*

8-0 **183**

59. *Amend – Ord. #281(06/07/2021), "Agreement – With N.Y.S. DOT for the scoping, preliminary design phases and the detail design phase for the East Colvin Street Paving Project, South Salina Street to Jamesville Avenue, PIN 3756.82, on behalf of the Department of Engineering, total cost not to exceed $475,000. The City will incur all initial costs with subsequent 80% reimbursement from the Federal government through TIP. Total project cost not to exceed $3,560,000." Amend to add the Construction and Construction Inspection Phase and increase by $3,085,000. Total project cost not to exceed $3,560,000, to be charged to Cash Capital Account #07.599807.701077100.80405.*

8-0 **184**

60. *Amend – Ord. #282 (06/07/2021), "Authorize – The scoping, preliminary design phases and the detail design phase for the East Colvin Street Paving Project, South Salina Street to Jamesville Avenue, PIN 3756.82, on behalf of the Department of Engineering, total cost not to exceed $475,000. The City will incur all initial costs with subsequent 80% reimbursement from the Federal government through TIP. Total project cost not to exceed $3,560,000." Amend to add the Construction and Construction Inspection Phase and increase by $3,085,000. Total project cost not to exceed $3,560,000, to be charged to Cash Capital Account #07.599807.701077100.80405.*

8-0 **185**

(SUPPLEMENTAL AGENDA – APRIL 11, 2022)
WAIVER OF THE RULES REQUIRED TO INTRODUCE:

BY COUNCILOR GREENE:

8-0 *61. Advertise Public Hearing – Relative to the Annual Estimate for the City of Syracuse and the Syracuse City School District for the Fiscal Year July 1, 2022-June 30, 2023. (Public Hearing to be held on Monday, May 2, 2022 at 5:30 P.M.)* ***186***

H *62. Annual Estimate – For the City of Syracuse and the Syracuse City School District for the Fiscal Year July 1, 2022 – June 30, 2023. (Public Hearing to be held on Monday, May 2, 2022 at 5:30 P.M.)* ***H***

Syracuse Common Council
Adjourned at 1:18 PM

Ordinance No. 2022

ORDINANCE AUTHORIZING ACCEPTANCE OF A DONATION TO THE CITY OF SYRACUSE OF $6,000.00 FROM THE CENTRAL NEW YORK COMMUNITY FOUNDATION, ON BEHALF OF AN ANONYMOUS DONOR, FOR USE BY THE DEPARTMENT OF PARKS, RECREATION AND YOUTH PROGRAMS TO PURCHASE MEALS FOR THE COMMUNITY CENTER YOUTH DURING THE 2022 TRIP TO HERSHEY PARK AND ALSO TO SUPPORT THE DEPARTMENT'S FOOD POP UP EVENTS IN VARIOUS CITY PARKS THAT WILL PROVIDE FREE, HEALTHY MEALS FROM LOCAL VENDORS TO VISITORS OF CITY PARKS

BE IT ORDAINED, that this Common Council hereby authorizes the acceptance of a donation to the City of Syracuse of $6,000.00 from the Central New York Community Foundation, on behalf of an anonymous donor, for use by the Department of Parks, Recreation and Youth Programs to purchase meals for the community center youth participating in the 2022 trip to Hershey Park as well as to support the Department's Food Pop Up Events in various City Parks that will provide free healthy meals from local vendors to visitors of our City parks; the funds will be deposited into an appropriate account as designated by the Commissioner of Finance, and when necessary shall be dispensed to Parks Department Account #504650.25.71400 to be used for the above described purposes.

SYRACUSE DEPARTMENT OF PARKS, RECREATION & YOUTH PROGRAMS

CITY OF SYRACUSE, MAYOR BEN WALSH

March 25, 2022

Julie LaFave
Commissioner

Patricia McBride
City Clerk
231 City Hall
Syracuse, NY 13202

RE: REQUEST FOR LEGISLATION

Dear Ms. McBride:

Please prepare legislation from the next regularly scheduled Common Council meeting to **authorize** the Department of Parks, Recreation & Youth Programs **to accept a donation from Central New York Community Foundation, on behalf of an anonymous donor in the amount of $6,000.**

The funds will be deposited into the Rec Center Fundraising account # 404650.25.71400, and will be used to purchase meals at Hersheypark for our community center youth. as well as multiple free healthy meals from local vendors to visitors of our parks. Details of the food pop up events at the parks will be coordinated by the Parks & Recreation department. These expenses will be charged to account # 504650.25.71400.

If you have any questions or comments regarding this, please contact our office.

Sincerely,

Julie LaFave
Commissioner

Syracuse Department
of Parks, Recreation
& Youth Programs
412 Spencer Street
Syracuse, N.Y. 13204

Office 315 473 4330
Fax 315 428 8513

www.syrgov.net

11

DEPARTMENT OF PARKS, RECREATION & YOUTH PROGRAMS

CITY OF SYRACUSE, MAYOR BEN WALSH

March 25, 2022

Julie LaFave
Commissioner

Patricia McBride
City Clerk
231 City Hall
Syracuse, NY 13202

RE: Request for Legislation

Dear Ms. McBride,

Please prepare legislation for the next meeting of the Common Council to authorize the department to enter into agreement with Cumulus Media, as a part of their "Sweet Deals" promotions. The department will provide one hundred gift certificates for golfing passes (value $6000) and receive $7,600 value of on-air promotions. The passes and City golf courses will be advertised on air, via social media, through interviews, etc. The provided passes will be sold at a discounted rate, but the city courses will be heavily promoted and will expect to see a boost in revenue and season passes sold.

The terms of this agreement shall be for the duration of the 2022 Golf Season.

If you have any questions or comments regarding this, please contact our office.

Sincerely,

Julie LaFave
Commissioner

Syracuse Department
of Parks, Recreation
& Youth Programs
412 Spencer Street
Syracuse, N.Y. 13204

Office 315 473 4330
Fax 315 428 8513

www.syrgov.net

OFFICE OF MANAGEMENT & BUDGET

CITY OF SYRACUSE, MAYOR BEN WALSH

Timothy M. Rudd
Director

Julie Castellitto
Assistant Director

TO: Mayor Ben Walsh
FROM: Timothy M. Rudd, Director of Management and Budget
DATE: March 28, 2022
SUBJECT: Agreement with Cumulus Media

On behalf of the Department of Parks, Recreation & Youth Programs, I am requesting that the City of Syracuse enter into an agreement with Cumulus Media, as a part of their "Sweet Deals" promotions. The department will provide one hundred gift certificates for golfing passes (value $6,000) and receive $7,600 value of on-air promotions. The passes and City golf courses will be advertised on air, via social media, through interview, etc. The provided passes will be sold at a discounted rate, but the City courses will be heavily promoted and will expect to see a boost in revenue and season passes sold.

The terms of this agreement shall be for the duration of the 2022 Golf Season.

If you agree to enter into this agreement with **Cumulus Media** please indicate so by signing below and returning this memo to me so that I may forward a copy to the Common Council along with the legislation request for the next Common Council Meeting.

Thank you for your attention regarding this matter.

Mayor Ben Walsh
City of Syracuse, New York

3/30/2022
Date

Office of Management
and Budget
233 E Washington St
Room 213
Syracuse, N.Y. 13202

Office 315 448-8252
Fax 315 448-8116

www.syrgov.net

Ordinance No. 2022

ORDINANCE AUTHORIZING AN AGREEMENT WITH THE HAVEN AT SKANDA RELATIVE TO PROVIDING EDUCATIONAL AND HANDS ON LEARNING EXPERIENCES FOR COMMUNITY CENTER YOUTH ON BEHALF OF THE DEPARTMENT OF PARKS, RECREATION AND YOUTH PROGRAMS

BE IT ORDAINED, subject to the approval of the Mayor, that the Mayor be and he is hereby authorized to enter into an agreement with The Haven at Skanda to provide educational and hands-on learning experiences at their farm location to youth from City of Syracuse community centers on behalf of the Department of Parks, Recreation and Youth Programs; and

BE IT FURTHER ORDAINED, that pursuant to this Agreement The Haven at Skanda will teach the youth participants how to pet, groom, feed and care for the rescue animals on the farm; and

BE IT FURTHER ORDAINED, that said agreement shall have a cost not to exceed $300.00 per visit to the farm, with a total cost not to exceed $1,800.00 for all services to be provided under this agreement; and

BE IT FURTHER ORDAINED, that all costs associated with this agreement shall be charged to Parks Department Budget Account #01.71400.541500 or another appropriate account as designated by the Commissioner of Finance; and

BE IT FURTHER ORDAINED, that said agreement shall contain such other terms and conditions as the Corporation Counsel shall deem in the best interest of the City of Syracuse.

12

DEPARTMENT OF PARKS, RECREATION & YOUTH PROGRAMS

CITY OF SYRACUSE, MAYOR BEN WALSH

Julie LaFave
Commissioner

March 24, 2022

Patricia McBride
City Clerk
231 City Hall
Syracuse, NY 13202

RE: REQUEST FOR LEGISLATION

Dear Ms. McBride,

Please prepare legislation for the next meeting of the Common Council authorizing payment to **The Haven at Skanda** to provide educational and hands-on learning experiences to youth from our community centers at their farm location.

Under this agreement, the Haven at Skanda will teach our youth how to pet, groom, feed and care for their rescue animals. Transportation to the Haven will be provided by City staff in City vehicles. Each trip to the Haven will cost $300.

Payment **will not exceed $1,800.00 and** will be charged to budget account # **01.71400.541500**.

Sincerely,

Julie LaFave
Commissioner

Syracuse Department
of Parks, Recreation
& Youth Programs
412 Spencer Street
Syracuse, N.Y. 13204

Office 315 473 4330
Fax 315 428 8513

www.syrgov.net

10

OFFICE OF MANAGEMENT & BUDGET

CITY OF SYRACUSE, MAYOR BEN WALSH

Timothy M. Rudd
Director

Julie Castellitto
Assistant Director

TO: Mayor Ben Walsh
FROM: Timothy M. Rudd, Director of Management & Budget
DATE: March 28, 2022
SUBJECT: Agreement with The Haven at Skanda

On behalf of the Department of Parks, Recreation & Youth Programs, I am requesting that the City of Syracuse enter into an agreement with **The Haven at Skanda** to provide educational and hands-on learning experiences to youth from our community centers at their farm location.

Under this agreement, The Haven at Skanda will teach our youth how to pet, groom, feed and care for their rescue animals. Transportation to the Haven will be provided by City staff in City vehicles. Each trip to the Haven will cost $300.

The amount of the agreement will not exceed $1,800.00 and will be charged to budget account #01.71400.541500.

If you agree to enter into this agreement, please indicate by signing below and returning this memo to me so that I may forward a copy to the Common Council along with the legislation request for the next Common Council Meeting.

Thank you for your attention regarding this matter.

Mayor Ben Walsh
City of Syracuse, New York

3/30/2022
Date

Office of Management
and Budget
233 E Washington St
Room 213
Syracuse, N.Y. 13202

Office 315 448-8252
Fax 315 448-8116

www.syrgov.net

Ordinance No. 2022

ORDINANCE AUTHORIZING PAYMENT OF $525.00 TO RECDESK, LLC FOR A VARIABLE SURCHARGE PROCESSED BETWEEN FEBRUARY 11, 2021 THROUGH JANUARY 31, 2022 ASSOCIATED WITH THE ONLINE REGISTRATION PROGRAM FOR PARKS DEPARTMENT PROGRAMS AND PERMITS

BE IT ORDAINED, that the Commissioner of Finance be and he is hereby authorized to issue warrants to cover costs associated with the variable surcharge charged by RecDesk LLC between February 11, 2021 through January 31, 2022 for their online registration program that is utilized by the Department of Parks, Recreation and Youth Programs for its various programs and permits:

- RecDesk LLC $525.00

;and

BE IT FURTHER ORDAINED, that said payments shall be charged to Account #01.71400.540530 or another appropriate account as designated by the Commissioner of Finance.

13

DEPARTMENT OF PARKS, RECREATION & YOUTH PROGRAMS

CITY OF SYRACUSE, MAYOR BEN WALSH

Julie LaFave
Commissioner

March 24, 2022

Patricia McBride
City Clerk
231 City Hall
Syracuse, NY 13202

RE: REQUEST FOR LEGISLATION

Dear Ms. McBride,

Please prepare legislation for the next meeting of the Common Council authorizing payment to **RecDesk LLC** to pay for the a variable surcharge on revenue processed between February 1, 2021 to January 31, 2022.

Payment **will not exceed $525.00 and** will be charged to budget account # **01.71400.540530.**

Sincerely,

Julie LaFave
Commissioner

Syracuse Department
of Parks, Recreation
& Youth Programs
412 Spencer Street
Syracuse, N.Y. 13204

Office 315 473 4330
Fax 315 428 8513

www.syrgov.net

K

Ordinance No. 2022

ORDINANCE AUTHORIZING PAYMENT OF $250.00 TO MICHAEL LAWLER TO PROVIDE BALLOON ART AT THE DEPARTMENT OF PARKS, RECREATION AND YOUTH PROGRAMS' BIG RIG DAY WHICH IS SCHEDULED TO BE HELD ON MAY 14, 2022 AT BURNET PARK

BE IT ORDAINED, that the Commissioner of Finance be and he is hereby authorized to issue warrants to cover costs associated with providing balloon art at the Department of Parks, Recreation and Youth Programs' Big Rig Day which is scheduled to be held on May 14, 2022 at Burnet Park:

- Michael Lawler $250.00

;and

BE IT FURTHER ORDAINED, that said payments shall be charged in part to Celebrations Account #5046100 Fund #25 with any remaining amount due to be charged to Account #01.71400.540552 or another appropriate account as designated by the Commissioner of Finance.

14

SYRACUSE DEPARTMENT OF PARKS, RECREATION & YOUTH PROGRAMS

CITY OF SYRACUSE, MAYOR BEN WALSH

March 24, 2022

Julie LaFave
Commissioner

Patricia McBride
City Clerk
231 City Hall
Syracuse, NY 13202

RE: REQUEST FOR LEGISLATION

Dear Ms. McBride,

Please prepare legislation for the next Common Council meeting to allow the Department of Parks, Recreation and Youth Programs to authorize payment, at a cost not to exceed $250.00, to Michael Lawler for providing balloon art for big Rig Day at Burnet Park on May 14, 2022.

Part of the monies will come from the Celebrations Account Project #5046100 Fund #25. The balance will come from 01.71400.540552.

If you have any questions or comments regarding this, please contact our office.

Sincerely,

Julie LaFave
Commissioner

Syracuse Department
of Parks, Recreation
& Youth Programs
412 Spencer Street
Syracuse, N.Y. 13204

Office 315 473 4330
Fax 315 428 8513

www.syrgov.net

Ordinance No. 2022

ORDINANCE AUTHORIZING PAYMENT TO BLAKE PROPST FOR SERVICES RELATIVE TO A MUSICAL PERFORMANCE AT ROSE DAY AT THORNDEN PARK, WHICH IS SCHEDULED TO BE HELD ON JUNE 15, 2022

BE IT ORDAINED, that the Commissioner of Finance be and he is hereby authorized to issue warrants to cover costs associated with a musical performance by Blake Propst at Rose Day at Thornden Park which is scheduled to be held on June 15, 2022:

- Blake Propst, $300.00

and

BE IT FURTHER ORDAINED, that said payments shall be charged to Recreation Account #01.71400.540552 or another appropriate account as designated by the Commissioner of Finance.

15

DEPARTMENT OF PARKS, RECREATION & YOUTH PROGRAMS

CITY OF SYRACUSE, MAYOR BEN WALSH

Julie LaFave
Commissioner

March 24, 2022

Patricia McBride
City Clerk
231 City Hall
Syracuse, NY 13202

RE: REQUEST FOR LEGISLATION

Dear Ms. McBride,

Please prepare legislation for the next Common Council meeting to allow the Department of Parks, Recreation and Youth Programs to authorize payment, at a cost not to exceed $300, to Blake Propst for performing at the 2022 Rose Day at Thornden Park on June 15.

The funds will be charged to Account# 01.71400.540552.
If you have any questions or comments regarding this, please contact our office.

Sincerely,

Julie LaFave
Commissioner

Syracuse Department
of Parks, Recreation
& Youth Programs
412 Spencer Street
Syracuse, N.Y. 13204

Office 315 473 4330
Fax 315 428 8513

www.syrgov.net

GROWTH. DIVERSITY. OPPORTUNITY FOR ALL.

12

Ordinance No. 2022

ORDINANCE WAIVING RESIDENCY REQUIREMENTS FOR LIFEGUARD POSITIONS IN THE DEPARTMENT OF PARKS, RECREATION AND YOUTH PROGRAMS FOR THE 2022 SUMMER AQUATIC PROGRAM

WHEREAS, the Commissioner of Parks, Recreation and Youth Programs has requested that the residency requirement be waived with respect to up to one hundred (100) lifeguard positions for the 2022 Summer Aquatic Program for the reason that there are not presently sufficient City resident applicants to fill the lifeguard positions needed to staff all twelve swimming pools on their regular operating schedule; and

WHEREAS, the Commissioner of Parks, Recreation and Youth Programs has certified that those persons, including non-residents, with previous experience in the summer recreation program and all City residents, where persons with prior experience are not available, will be given preference for employment in the positions as aforesaid;

NOW, THEREFORE,

BE IT ORDAINED, that the residency requirement set forth in Section 8-112 of the Charter of the City of Syracuse - 1960 be and the same is hereby waived with respect to up to one hundred (100) lifeguard positions in the Department of Parks, Recreation and Youth Programs for the 2022 Summer Aquatic Program, subject to the following conditions:

(1) The Commissioner of Parks, Recreation and Youth Programs shall verify the City residency of each applicant hired based upon the City residency set forth in each application.

(2) The Commissioner of Parks, Recreation and Youth Programs shall give preference for employment to City residents who meet the safety standard requirements prior to exercising the waiver herein granted.

Ordinance No. 2022

ORDINANCE WAIVING RESIDENCY REQUIREMENTS FOR POSITIONS IN THE DEPARTMENT OF PARKS, RECREATION AND YOUTH PROGRAMS TO WORK AND LEAD YOUTH PROGRAMMING DURING THE SUMMER OF 2022

WHEREAS, the Commissioner of Parks, Recreation and Youth Programs has requested that the residency requirement be waived with respect to positions in the Department of Parks, Recreation and Youth Programs associated with Youth Programming during the Summer of 2022, in order to allow for the hiring of current Syracuse City School District ("SCSD") employees who reside outside the City for these positions as these employees already have established relationships with many of City youth and they have experience critical to creating enjoyable, safe and educational programs; and

WHEREAS, the Commissioner of Parks, Recreation and Youth Programs has certified that those persons, including non-residents, with previous experience in the Summer Recreation Programs, and all City residents where persons with prior experience are not available, will be given preference for employment in the positions as aforesaid;

NOW, THEREFORE,

BE IT ORDAINED, that the residency requirement set forth in Section 8-112 of the Charter of the City of Syracuse - 1960 be and the same is hereby waived with respect to the 2022 Summer Youth Programming positions in the Department of Parks, Recreation and Youth Programs, subject to the following conditions:

(1) The Commissioner of Parks, Recreation and Youth Programs shall verify the City residency of each applicant hired based upon the City residency set forth in each application.

(2) The Commissioner of Parks, Recreation and Youth Programs shall give preference for employment to City residents who meet the standard requirements prior to exercising the waiver herein granted.

16-17

DEPARTMENT OF PARKS, RECREATION & YOUTH PROGRAMS

CITY OF SYRACUSE, MAYOR BEN WALSH

March 24, 2022

Julie LaFave
Commissioner

Patricia McBride
City Clerk
231 City Hall
Syracuse, NY 13202

RE: Request for Legislation – Residency Waiver

Dear Ms. McBride,

Please prepare legislation for the next Common Council Meeting allowing the Department of Parks, Recreation and Youth Programs to hire Lifeguards that do NOT reside within the City of Syracuse, not to exceed 100 for the 2022 summer season. This is necessary due to the lack of qualified applicants residing in the City of Syracuse. Without hiring additional lifeguards the Department of Parks, Recreation and Youth Programs will not be able to staff all pools and will be forced to reduce hours and/or close pools for the 2022 summer season.

I would like to also request legislation to hire current City of Syracuse School District employees who reside outside of the City to work and lead summer youth programming during 2022 summer season. These potential employees already have established relationships with many of our youth and have experience critical to creating enjoyable, safe and educational programs.

If you have any questions or comments regarding this, please contact our office.

Sincerely,

Julie LaFave
Commissioner

Syracuse Department
of Parks, Recreation
& Youth Programs
412 Spencer Street
Syracuse, N.Y. 13204

Office 315 473 4330
Fax 315 428 8513

www.syrgov.net

Ordinance No. 2022

ORDINANCE AUTHORIZING THE MAYOR TO ENTER INTO A COST SHARING AGREEMENT WITH THE CROUSE MARSHALL BUSINESS IMPROVEMENT DISTRICT

BE IT ORDAINED, that the Mayor, on behalf of the City of Syracuse, be and he hereby is authorized to execute a cost sharing agreement with the Crouse Marshall Business Improvement District, whereby the City and the Crouse Marshall Business District agree to split the cost for replacement of street amenities in the Crouse Marshall Area of the City of Syracuse; and

BE IT FURTHER ORDAINED, that the replacement of street amenities covered by this agreement shall include the costs associated with maintaining private and municipal sidewalks, street furniture, trash cans, trees and other plantings; and

BE IT FURTHER ORDAINED, that said agreement shall have a five year term effective as of July 1, 2022 through June 30, 2027; and

BE IT FURTHER ORDAINED, that the cost for the replacement of amenities in the Crouse Marshall area of the City of Syracuse is estimated not to exceed $25,000.00 per year; and

BE IT FURTHER ORDAINED, that pursuant to the Agreement the Crouse Marshall Business Improvement District and the City of Syracuse shall each be responsible for 50% of the cost of the replacement of amenities, and shall make an annual payment to the City of $12,500.00 for its share; and

BE IT FURTHER ORDAINED, that the cost of the City share for replacement of entities shall not exceed $12,500.00 and will be charged to Budget Account #595912.01.90000; and

BE IT FURTHER ORDAINED, that said agreement shall contain such other terms and conditions as the Corporation Counsel shall deem in the best interests of the City of Syracuse.

18

OFFICE OF MANAGEMENT & BUDGET

CITY OF SYRACUSE, MAYOR BEN WALSH

Timothy M. Rudd
Director

Julie Castellitto
Assistant Director

March 29, 2022

Ms. Patricia McBride
City Clerk
City Hall
Syracuse, New York

Re: Request for Legislation

Dear Ms. McBride,

Please prepare legislation to be introduced at the next Common Council Meeting authorizing the City of Syracuse to enter an agreement with the Crouse-Marshall Business Improvement District to cost share in the replacement of streetscape amenities, which include maintaining sidewalks, municipal sidewalks, street furniture, trash cans, trees and other plantings in the Crouse-Marshall area. This agreement will be for a five-year period beginning July 1, 2022 and ending June 30, 2027.

Expenditures are estimated not to exceed $25,000.00 annually, split between $12,500.00 City and $12,500.00 Crouse-Marshall Business Improvement District. The City funding is charged to Budget Account #595912.01.90000.

Thank you.

Sincerely,

Timothy M. Rudd
Director of Management and Budget

Office of Management
and Budget
233 E Washington St
Room 213
Syracuse, N.Y. 13202

Office 315 448-8252
Fax 315 448-8116

www.syrgov.net

6

OFFICE OF MANAGEMENT & BUDGET

CITY OF SYRACUSE, MAYOR BEN WALSH

Timothy M. Rudd
Director

Julie Castellitto
Assistant Director

TO: Mayor Benjamin Walsh
FROM: Timothy M. Rudd, Director of Management & Budget
DATE: March 29, 2022
SUBJECT: Agreement with the Crouse-Marshall Business Improvement District

On behalf of the Office of Management and Budget, I am requesting an agreement with the Crouse-Marshall Business Improvement District to cost share in the replacement of streetscape amenities, which include maintaining sidewalks, municipal sidewalks, street furniture, trash cans, trees and other plantings in the Crouse-Marshall area. This agreement will be for a five-year period beginning July 1, 2022 and ending June 30, 2027.

Expenditures are estimated not to exceed $25,000.00 annually, split between $12,500.00 City and $12,500 Crouse-Marshall Business Improvement District. The City funding is charged to Budget Account #595912.01.90000.

Please indicate your concurrence by signing below and returning this memo to me so that I may then forward your approval to the Common Council along with the request for authorizing this legislation.

Thank you for your attention regarding this matter.

Mayor Benjamin Walsh
City of Syracuse, New York

3/30/2022
Date

Office of Management
and Budget
233 E Washington St
Room 213
Syracuse, N.Y. 13202

Office 315 448-8252
Fax 315 448-8116

www.syrgov.net

Ordinance No. 2022

ORDINANCE AUTHORIZING A CONTRACT WITHOUT ADVERTISING OR COMPETITIVE BIDDING WITH MULTIMED BILLING SERVICE, INC. TO PROVIDE AMBULANCE BILLING AND ACCOUNTS RECEIVABLE SERVICES FOR THE CITY OF SYRACUSE ON BEHALF OF THE DEPARTMENT OF FIRE

WHEREAS, Section 5-205-A of the Charter of the City of Syracuse, as amended, provides the Mayor shall "award contracts for professional services subject to the approval of the Common Council"; and

WHEREAS, the Mayor has waived the Request for Proposal Process and approved the retention of MultiMed Billing Service, Inc. without advertising or competitive bidding, under the following terms:

(1) MultiMed Billing Service, Inc. shall provide the City of Syracuse with ambulance billing and accounts receivable services relative to ambulance transport services provided by the Department of Fire in accordance with the fee schedule established by the Department of Fire in General Ordinance No. 8-2022;

(2) The term of this contract will be for a period of twelve (12) months from the date of the execution of the agreement; and

(3) The City shall pay MultiMed Billing Service, Inc. in accordance with the following rate schedule: (a) 9% of all non-Medicaid monies collected; (b) $19.50 for money collected where Medicaid was the primary payer for the ambulance transport services; and (c) $6.50 for money collected when Medicaid is the secondary payer. The total cost to be paid for all services shall not exceed $75,000.00.

NOW, THEREFORE,

BE IT ORDAINED, that the Mayor, on behalf of the City of Syracuse, be and he hereby is authorized to execute such contract, as hereinabove stated, subject to the approval of the Corporation Counsel as to terms, form and execution; and

BE IT FURTHER ORDAINED, that the costs associated with this agreement shall be charged to Budget Account #01.541510.34101 or another appropriate account as designated by the Commissioner of Finance.

DEPARTMENT OF FINANCE

OFFICE OF THE COMMISSIONER
CITY OF SYRACUSE, MAYOR BEN WALSH

March 29, 2022

Bradley O'Connor CPA
Commissioner of Finance

Michael Cannizzaro, CPA
First Deputy Commissioner

Veronica Voss
Deputy Commissioner

Ms. Patricia K. McBride
City Clerk
City Hall
Syracuse, New York

RE: Waiver of RFP Process – Medical Billing for Ambulance Services

Dear Ms. McBride:

I recommend a waiver of the RFP process to enter into an agreement with MultiMed Billing Service, Inc. for ambulance billing and accounts receivable services.

Legislation passed on March 28, 2022 authorized the Department of Finance to bill for ambulance transport services provided by the Department of Fire. Medical billing services like these require a detailed understanding of State and Federal medical billing laws and Medicare, Medicaid and private insurance guidelines. MultiMed Billing Services, Inc. has a sole specialty in ambulance billing services and has done so for the past 33 years.

The agreement will be for a term of twelve months. Fees for the services shall not exceed $75,000 per year and will be charged as follows:

> A commission fee of nine percent (9.00%) of all non-Medicaid monies collected. For Medicaid claims, MultiMed will receive $19.50 per claim where Medicaid is the primary payer and $6.50 per claim where Medicaid is the secondary payer.

All costs will be charged to account 01. 541500 .34100 – Professional Services.

Sincerely,

Bradley O'Connor
Commissioner of Finance

Department of Finance
233 E. Washington St
City Hall, Room 128
Syracuse, N.Y. 13202

Office 315 448 8279
Fax 315 448 8424

www.syrgov.net

OFFICE OF MANAGEMENT & BUDGET

CITY OF SYRACUSE, MAYOR BEN WALSH

Timothy M. Rudd
Director

Julie Castellitto
Assistant Director

TO: Honorable Mayor Ben Walsh
FROM: Timothy M. Rudd, Director of Management & Budget
DATE: April 5, 2022
SUBJECT: Waiver of RFP Process & Enter Agreement – Medical Billing for Ambulance Services

On behalf of the Department of Finance, I am requesting a waiver of RFP process to enter into an agreement with **MultiMed Billing Service, Inc.** for ambulance billing and accounts receivable services.

Legislation passed on March 28, 2022 authorizing the Department of Finance to bill for ambulance transport services provided by the Department of Fire. Medical billing services like these require a detailed understanding of State and Federal medical billing laws and Medicare, Medicaid and private insurance guidelines. MultiMed Billing Services, Inc. has a sole specialty in ambulance billing services and has done so for the past 33 years.

The agreement will be for a term of twelve (12) months. Fees for the services shall not exceed $75,000 per year and will be charged as follows:

- A commission fee of nine percent (9.00%) of all non-Medicaid monies collected.
- For Medicaid claims, MultiMed will received $19.50 per claim where Medicaid is the primary payer and $6.50 per claim where Medicaid is the secondary payer.

All costs will be charged to account #01.541500.34100 – Professional Services.

Please indicate your concurrence by signing below and returning this memo to me so that I may then forward your approval to the Common Council along with the request for authorizing this legislation.

Thank you for your attention regarding this matter.

Mayor Ben Walsh
City of Syracuse, New York

Date 4/5/22

Office of Management and Budget
233 E Washington St
Room 213
Syracuse, N.Y. 13202

Office 315 448-8252
Fax 315 448-8116

www.syrgov.net

20

Ordinance No. 2022

ORDINANCE APPROVING SETTLEMENT OF A TAX CERTIORARI PROCEEDING AGAINST THE CITY OF SYRACUSE

WHEREAS, the Commissioner of Assessment and Corporation Counsel have negotiated settlement with the attorney for the petitioner in a tax certiorari proceeding pending against the City of Syracuse; and

WHEREAS, the Corporation Counsel, in the best interest of the City, recommends settlement of this proceeding; and

WHEREAS, the Mayor has approved this settlement pursuant to Section 5-1103 of the Charter of the City of Syracuse, as amended; NOW, THEREFORE,

BE IT ORDAINED, pursuant to Section 5-1103 of the Charter of the City of Syracuse, as amended, this Common Council hereby approves the settlement of the following tax certiorari proceeding upon the following terms:

Baruch Lincoln, LLC v. The City of Syracuse, et al.
Index Nos. 003476/2021
Property: 110 West Fayette Street (Tax Map No.: 104-27-03.0)
Tax Years 2021/2022

Under the terms of the proposed settlement, the Petitioner would agree to discontinue the proceeding, the assessment for Tax Year 2021/2022 will be reduced from $18,050,000 to $17,100,000; the tax roll for 2021 will be amended to reflect the new assessment and new bills will be reissued for the City/School Taxes for the Fourth Quarter and the County Taxes for the Second, Third and Fourth Quarters that reflect the new reduced Assessment; the tax roll for 2022 will be also amended to reflect the reduction in assessment. Pursuant to New York State Real Property Tax Law Section 727 the reduced assessment will not be changed for the next succeeding assessment rolls (2023/2024, 2024/2025, and 2025/2026); the parties have agreed that there will be no refund issued as a result of the reduction in Assessment for Fiscal Year 2021/2022.

; and

BE IT FURTHER ORDAINED, that the Corporation Counsel be and hereby is authorized to execute stipulations and any other documents necessary to settle the above tax certiorari proceedings.

20

DEPARTMENT OF LAW

OFFICE OF THE CORPORATION COUNSEL

CITY OF SYRACUSE, MAYOR BEN WALSH

Susan R. Katzoff
Corporation Counsel

Joseph W. Barry III
First Assistant
Corporation Counsel

Lee R. Terry
Senior Assistant
Corporation Counsel

Todd M. Long
Senior Assistant
Corporation Counsel

Catherine E. Carnrike
Meghan E. Ryan
Amanda R. Harrington
John C. Black Jr.
Ramona L. Rabeler
Sarah M. Knickerbocker
Danielle B. Pires
Finney Raju
Patrick R. Blood
Patrick J. Parkinson
Danielle R. Smith
Jody A. Mooney
Shannon L. Bausinger
Beth-El Thomas

March 31, 2022

Hon. Patricia K. McBride
City Clerk
231 City Hall
Syracuse, New York 13202

Re: Ordinance Approving Settlement of Tax Certiorari Proceedings
Baruch Lincoln, LLC vs. The City of Syracuse, et al.
Index No.: 003476/2021
110 West Fayette Street 104.-27-03.0
Tax Year: 2021/22

Dear Ms. McBride:

Please place on the agenda for the next meeting of the Common Council an ordinance authorizing the Corporation Counsel to settle the above referenced tax certiorari proceedings for the tax years indicated with Baruch Lincoln, LLC.

Based on the City's structural financial difficulties and the Council's longstanding concern over issuing refund, the Department of Law and Department of Assessment reached a negotiated settlement that will not result in the City issuing any refunds. The City has tentatively agreed to reduce the assessment from $18,050,000 to $17,100,000 for tax year 2021/22. Pursuant to RPTL 727 the reduced assessment will not be changed for the next succeeding assessment rolls (2023/24, 2024/25, and 2025/26).

Assuming approval, the ordinance will authorize an amendment of the 2021 tax roll in order to reissue bills for the City/School quarter 4 and the County quarters 2, 3, and 4 to reflect the change of assessment.

Further, we are seeking authorization to amend the 2022 tax roll to reflect the reduction in the assessment.

Department of Law
Office of Corp. Counsel
233 E. Washington St.
City Hall, Room 300
Syracuse, N.Y. 13202

Office 315 448-8400
Fax 315 448-8381
Email
law@syrgov.net

www.syrgov.net

Service of papers or process by facsimile or other electronic method is not acceptable.

In my opinion, this settlement is in the best interest of the City and is supported by the Commissioner of Assessment.

Respectfully,

Joseph W. Barry, III, Esq.
First Assistant Corporation Counsel

Cc: Sharon Owens

Ordinance No. 2022

ORDINANCE APPROVING SETTLEMENT OF A TAX CERTIORARI PROCEEDING AGAINST THE CITY OF SYRACUSE

WHEREAS, the Commissioner of Assessment and Corporation Counsel have negotiated settlement with the attorney for the petitioner in a tax certiorari proceeding pending against the City of Syracuse; and

WHEREAS, the Corporation Counsel, in the best interest of the City, recommends settlement of this proceeding; and

WHEREAS, the Mayor has approved this settlement pursuant to Section 5-1103 of the Charter of the City of Syracuse, as amended; NOW, THEREFORE,

BE IT ORDAINED, pursuant to Section 5-1103 of the Charter of the City of Syracuse, as amended, this Common Council hereby approves the settlement of the following tax certiorari proceeding upon the following terms:

COR West Kirkpatrick Street Company, LLC v. The City of Syracuse et. al.
Index Nos. 004036/2021
Property: 310 Kirkpatrick Street West (Tax Map No.: 117.-01-10.1)
Tax Years 2021/22

Under the terms of the proposed settlement, the Petitioner would agree to discontinue the proceeding, the assessment for Tax Year 2021/2022 will be reduced from $8,040,000 to $5,700,000; the parties have agreed that there will be no refund issued as a result of the reduction in Assessment for the first three quarters of the City/School taxes and the remaining three quarters of its 2022 County taxes at the stipulated reduced assessment. The tax roll for 2021 will be amended to reflect the new assessment and new bills will be reissued for the City/School Taxes for the Fourth Quarter and the County Taxes for the Second, Third and Fourth Quarters that reflect the new reduced Assessment Petitioner will pay the fourth quarter of its 2021/2022 City/School taxes and the remaining three quarters of its 2022 County taxes at the stipulated reduced assessment. The tax roll for 2022 will be also amended to reflect the reduction in assessment. The assessment will be reduced for Tax Year 2022/2023 to $5,279,195 and mandate the stabilization of the fair market value of the property at $7,651,007 for Tax Years 2023/2024, 2024/2025, and 2025/2026. The

provisions of New York State Real Property Tax Law Section 727 shall apply to Tax Years 2023/2024, 2024/2025, and 2025/2026 modified as follows: the assessment for each year shall not exceed the assessment computed by applying the uniform percentage of value available at the time the tentative assessment roll is filed each year to the stipulated fair market value of $7,651,007.;

; and

BE IT FURTHER ORDAINED, that the Corporation Counsel be and hereby is authorized to execute stipulations and any other documents necessary to settle the above tax certiorari proceeding.

DEPARTMENT OF LAW

OFFICE OF THE CORPORATION COUNSEL

CITY OF SYRACUSE, MAYOR BEN WALSH

Susan R. Katzoff
Corporation Counsel

Joseph W. Barry III
First Assistant
Corporation Counsel

Lee R. Terry
Senior Assistant
Corporation Counsel

Todd M. Long
Senior Assistant
Corporation Counsel

Catherine E. Carnrike
Meghan E. Ryan
Amanda R. Harrington
John C. Black Jr.
Ramona L. Rabeler
Sarah M. Knickerbocker
Danielle B. Pires
Finney Raju
Patrick R. Blood
Patrick J. Parkinson
Danielle R. Smith
Jody A. Mooney
Shannon L. Bausinger
Beth-El Thomas

March 31, 2022

Hon. Patricia K. McBride
City Clerk
231 City Hall
Syracuse, New York 13202

Re: Ordinance Approving Settlement of Tax Certiorari Proceedings
COR West Kirkpatrick Street Company, LLC vs. The City of Syracuse, et al.

Index No.: 004036/2021
310 Kirkpatrick Street West 117.-01-10.1
Tax Year: 2021/22

Dear Ms. McBride:

Please place on the agenda for the next meeting of the Common Council an ordinance authorizing the Corporation Counsel to settle the above referenced tax certiorari proceedings for the tax years indicated with COR West Kirkpatrick Street Company, LLC, the Petitioner in the tax certiorari proceedings.

Based on the City's structural financial difficulties and the Council's longstanding concern over issuing refunds, the Department of Law and Department of Assessment reached a negotiated settlement that will not result in the City issuing any refunds.

Under the terms of the proposed settlement, the Assessment will be reduced from $8,040,000 to $5,700,000 for 2021/22 with Petitioner agreeing to waive refunds for the first three quarters of the City/School taxes and the first quarter of the County taxes for tax year 2021/22. Petitioner will pay the fourth quarter of its 2021/22 City/School taxes and the remaining three quarters of its 2022 County taxes at the stipulated reduced assessment. The settlement will reduce the assessment for 2022/23 to $5,279,195 and mandate the stabilization of the fair market value of the

Department of Law
Office of Corp. Counsel
233 E. Washington St.
City Hall, Room 300
Syracuse, N.Y. 13202

Office 315 448-8400
Fax 315 448-8381
Email
law@syrgov.net

www.syrgov.net

Service of papers or process by facsimile or other electronic method is not acceptable.

property at $7,651,007 for 2023/24, 2024/25, and 2025/26. The provisions of RPTL §727 shall apply to tax years 2023/24, 2024/25, and 2025/26 modified as follows: the assessment for each year shall not exceed the assessment computed by applying the uniform percentage of value available at the time the tentative assessment roll is filed each year to the stipulated fair market value of $7,651,007.

Assuming approval, the ordinance will authorize an amendment to the 2021 roll in order to reissue bills for the City/School quarter 4 and the County quarters 2, 3, and 4 to reflect the change of assessment.

Further, we are seeking authorization to amend the 2022 roll to reflect the reduction in the assessment.

In my opinion, this settlement is in the best interest of the City and is supported by the Commissioner of Assessment.

Respectfully,

Susan R. Katzoff

Susan R. Katzoff, Esq.
Corporation Counsel

Cc: Sharon Owens

Ordinance No. 2022

ORDINANCE APPROVING SETTLEMENT OF A TAX CERTIORARI PROCEEDING AGAINST THE CITY OF SYRACUSE

WHEREAS, the Commissioner of Assessment and Corporation Counsel have negotiated settlement with the attorney for the petitioner in a tax certiorari proceeding pending against the City of Syracuse; and

WHEREAS, the Corporation Counsel, in the best interest of the City, recommends settlement of this proceeding; and

WHEREAS, the Mayor has approved this settlement pursuant to Section 5-1103 of the Charter of the City of Syracuse, as amended; NOW, THEREFORE,

BE IT ORDAINED, pursuant to Section 5-1103 of the Charter of the City of Syracuse, as amended, this Common Council hereby approves the settlement of the following tax certiorari proceedings upon the following terms:

95 NYRPT, LLC for itself and as agent-in-fact for FBBT/US Properties, LLC v. The City of Syracuse et. al.

Index Nos.	003755/2021 003016/2020 003248/2019 004047/2018 2017EF1760 2016EF1535
Property:	612 Second North Street (Tax Map No.: 003.-12-22.0)
Tax Years	2016/2017, 2017/2018, 2018/2019, 2019/2020, 2020/2021, 2021/2022, 2022/2023

Under the terms of the proposed settlement, the Petitioner would agree to discontinue the proceedings, the assessment for Tax Year 2016/2017 will remain at $625,000, and the assessment for Tax Years 2017/2018, 2018/2019, 2019/2020, 2020/2021, 2021/2022 will remain at $550,000, and the assessment for Tax Year 2022/2023 will be reduced from $550,000 to $290,000. This reduction is due to the departure of Petitioner's remaining tenant in June. The reduced assessment will remain in place for the next three Tax Years 2023/2024, 2024/2025, and 2025/2026 or until another tenant is secured pursuant to New York State Real Property Tax Law Section 727.

; and

BE IT FURTHER ORDAINED, that the Corporation Counsel be and hereby is authorized to execute stipulations and any other documents necessary to settle the above tax certiorari proceeding.

22

DEPARTMENT OF LAW

OFFICE OF THE CORPORATION COUNSEL

CITY OF SYRACUSE, MAYOR BEN WALSH

Susan R. Katzoff
Corporation Counsel

Joseph W. Barry III
First Assistant
Corporation Counsel

Lee R. Terry
Senior Assistant
Corporation Counsel

Todd M. Long
Senior Assistant
Corporation Counsel

Catherine E. Carnrike
Meghan E. Ryan
Amanda R. Harrington
John C. Black Jr.
Ramona L. Rabeler
Sarah M. Knickerbocker
Danielle B. Pires
Finney Raju
Patrick R. Blood
Patrick J. Parkinson
Danielle R. Smith
Jody A. Mooney
Shannon L. Bausinger
Beth-El Thomas

Department of Law
Office of Corp. Counsel
233 E. Washington St.
City Hall, Room 300
Syracuse, N.Y. 13202

Office 315 448-8400
Fax 315 448-8381
Email law@syrgov.net

www.syrgov.net

March 31, 2022

Hon. Patricia K. McBride
City Clerk
231 City Hall
Syracuse, New York 13202

Re: Ordinance Approving Settlement of Tax Certiorari Proceedings
95 NYRPT, LLC for itself and as agent-in fact for FBBT/US Properties, LLC vs. The City of Syracuse, et al.
Index Nos.: 003755/2021; 003016/2020; 003248/2019; 004047/2018; 2017EF1730; 2016EF1535;
612 Second North Street 003.-12-22.0
Tax Years: 2016/2017 through 2021/22

Dear Ms. McBride:

Please place on the agenda for the next meeting of the Common Council an ordinance authorizing the Corporation Counsel to settle the above referenced tax certiorari proceedings for the tax years indicated with 95 NYRPT, LLC for itself and as agent-in fact for FBBT/US Properties, LLC, the Petitioner in the tax certiorari proceedings.

Under the terms of the proposed settlement, the Petitioner will discontinue the proceedings for the property upon the following terms:

- 2016/17 assessment will remain at $625,000
- 2017/18 assessment will remain at $550,000
- 2018/19 assessment will remain at $550,000
- 2019/20 assessment will remain at $550,000
- 2020/21 assessment will remain at $550,000
- 2021/22 assessment will remain at $550,000
- 2022/23 assessment will be reduced from $550,000 to $290,000

Based on the City's structural financial difficulties and the Council's longstanding concern over issuing refunds, the Department of Law and Department of Assessment reached a negotiated settlement that will not result in the City issuing any refunds. The settlement provides that the assessment for the property will be

48

reduced to $290,000 due to the departure of its remaining tenant in June. The reduced assessment will remain in place for the next three tax years (2023/24, 2024/25, and 2025/26), or until another tenant is secured pursuant to RPTL §727.

Further, we are seeking authorization to amend the 2022 roll to reflect the reduction in the assessment.

In my opinion, this settlement is in the best interest of the City and is supported by the Commissioner of Assessment.

Respectfully,

Susan R. Katzoff

Susan R. Katzoff, Esq.
Corporation Counsel

Cc: Sharon Owens

Ordinance No. 2022

ORDINANCE AUTHORIZING COMPROMISE OF REAL PROPERTY TAXES DUE AND OWING FOR THE PREMISES KNOWN AS 700-716 SOUTH GEDDES STREET & GRAND AVENUE, SYRACUSE NEW YORK

WHEREAS, there are unpaid real property taxes against the property situated at 700-716 South Geddes Street & Grand Avenue, Syracuse, New York, Property No. 0831005600, for the years 2018/2019, 2019/2020, 2020/2021, and 2021/2022 (July – October) as follows:

Year	Total City/School Taxes owed including principal and interest
2018/2019	$3,764.34
2019/2020	$3,514.12
2020/2021	$3,661.96
2021/2022 (July-October)	$1,431.96
Total:	$12,375.38

and

WHEREAS, the owner of said property, 700 Geddes LLC, has requested that the Common Council waive all City/School taxes including interest for the years 2018/2019, 2019/2020, 2020/2021, and 2021/2022 in the sum of $12,375.38 which are due and owing; NOW, THEREFORE,

BE IT ORDAINED, that this Common Council hereby compromises the unpaid real property taxes for the property situated at 700-716 South Geddes Street & Grand Avenue, Syracuse, New York, for the years 2018/2019, 2019/2020, 2020/2021, and 2021/2022 (July – October), by waiving fees and penalties in the sum of $12,375.38 with no payment due; and

BE IT FURTHER ORDAINED, that the aforementioned compromise is conditioned upon the owner paying the County portion of the taxes for the years listed above including interest, fees

and penalties.

DEPARTMENT OF FINANCE

OFFICE OF THE COMMISSIONER
CITY OF SYRACUSE, MAYOR BEN WALSH

Bradley O'Connor CPA
Commissioner of Finance

Michael Cannizzaro, CPA
First Deputy Commissioner

Veronica Voss
Deputy Commissioner

March 29, 2022

Ms. Patricia McBride , City Clerk
230 City Hall
Syracuse, NY 13202

Re: Request for Legislation Waiver of Delinquent Tax Bills – 700-16 South Geddes Street | 700 Geddes Street LLC

Dear Ms. McBride:

Please prepare legislation to be placed on the agenda for the regularly scheduled Common Council meeting of April 11, 2022 authorizing the waiver of delinquent tax bills owned for the following periods:

	Tax Period:	Amount to be Waived:
•	2018-19 City/School:	$3,767.34
•	2019-20 City School:	$3,514.12
•	2020-21 City/School:	$3,661.96
•	2021-22 City/School (July/Oct):	$1,431.96
	TOTAL:	**$12,375.38**

The property in question was acquired through foreclosure upon successful purchase of tax liens from the City of Syracuse in 2019, as part of the City of Syracuse's "Brownfield Lien Sale" program. The property faced significant delays with the foreclosure due to the Covid-19 pandemic, and has just recently taken title to the property. The property is undergoing redevelopment and will renovated and assist with the ongoing revitalization of the Geddes Street Business Corridor.

Please contact me with any questions at 315-448-8323.

Sincerely,

Brad O'Connor
Commissioner of Finance

Cc:
Brad O'Connor, Commissioner of Finance
Veronica Voss, Deputy Commissioner of Finance
Michael Collins, Commissioner of NBD

Department of Finance
233 E. Washington St
City Hall, Room 128
Syracuse, N.Y. 13202

Office 315 448 8279
Fax 315 448 8424

www.syrgov.net

City of Syracuse
Department of Finance
233 E Washington St. Room 122
Syracuse, NY 13202
(315) 448-8310
www.syrgov.net

ACCOUNT SUMMARY
As of 03/11/2022

Owner Name:	700 GEDDES LLC	Property Number:	0831005600
Property Address:	700-16 GEDDES ST S & GRAND AVE	Tax Map:	097.-15-01.0
Print Date:	03/11/2022	Property Index:	192731
Legal Description:	LOT P1 BL 94 TR TRIA MAP FL 333&334 166.5OX177.27TRI GAS STA		

700 GEDDES LLC
701 S GEDDES ST
SYRACUSE NY 13204

Seizable

Current Bills	First	Second	Third	Fourth	Minimum	Total
County 2022	**January**	**April**	**July**	**October**		
ONO	**249.26**	249.24	249.24	249.24	**249.26**	996.98
SWR	**117.35**	117.34	117.34	117.34	**117.35**	469.37
WTR	**0.88**	0.88	0.88	0.88	**0.88**	3.52
Interest:	**11.02**	0.00	0.00	0.00	**11.02**	11.02
Paid Tax:	0.00	0.00	0.00	0.00	0.00	0.00
Paid Interest:						
Paid Total:						
Paid Date:						
Due:	**378.51**	367.46	367.46	367.46	**378.51**	1,480.89
City/School 2021/22	**July**	**October**	**January**	**April**		
CTY	**225.32**	**225.29**	**225.29**	225.29	**675.90**	901.19
SCH	**385.93**	**385.88**	**385.88**	385.88	**1,157.69**	1,543.57
FLU	**23.90**	**23.89**	**23.89**	23.89	**71.68**	95.57
WF002	**4.16**	**4.16**	**4.16**	4.16	**12.48**	16.64
Interest:	**76.72**	**76.71**	**76.71**	0.00	**230.14**	230.14
Paid Tax:	0.00	0.00	0.00	0.00	0.00	0.00
Paid Interest:						
Paid Total:						
Paid Date:						
Due:	**716.03**	**715.93**	**715.93**	639.22	**2,147.89**	2,787.11
County 2021	**January**	**April**	**July**	**October**		
ONO	**257.93**	**257.90**	**257.90**	**257.90**	**1,031.63**	1,031.63
SWR	**115.53**	**115.52**	**115.52**	**115.52**	**462.09**	462.09
WTR	**0.92**	**0.92**	**0.92**	**0.92**	**3.68**	3.68
COUNTYADV	**0.00**	**0.00**	**0.00**	**38.50**	**38.50**	38.50
Interest:	**44.93**	**44.92**	**44.92**	**44.92**	**179.69**	179.69
Paid Tax:	0.00	0.00	0.00	0.00	0.00	0.00
Paid Interest:						
Paid Total:						
Paid Date:						
Due:	**419.31**	**419.26**	**419.26**	**457.76**	**1,715.59**	1,715.59
Total Current		**Quarters Due: 3,821.14**			**4,241.99**	5,983.59

Delinquent Bills	Tax Sale	Interest	Total
2020-21 City/School	3,454.68	207.28	3,661.96
2019-20 City/School	2,983.94	530.18	3,514.12
2020 County	1,821.78	213.99	2,035.77
2018-19 City/School	2,906.84	860.50	3,767.34
2019 County	1,825.87	428.97	2,254.84
Total Delinquent	**12,993.11**	**2,240.92**	**15,234.03**

Grand Totals	Bill	Interest	Minimum	Total
	18,517.35	**2,661.77**	**19,476.02**	**21,217.62**

Delinquent Bills:

1. Must be paid with certified funds or cash. No personal checks accepted.
2. Amounts due will increase 1% on the 7th of each month unless paid, entered into a Tax Trust, or the property is seized.

24

Ordinance No. 2022

ORDINANCE AUTHORIZING COMPROMISE OF REAL PROPERTY TAXES DUE AND OWING FOR THE PREMISES KNOWN AS 301-303 SOUTH GEDDES STREET & MARCELLUS STREET, SYRACUSE NEW YORK

WHEREAS, there are unpaid real property taxes against the property situated at 301-303 South Geddes Street & Marcellus Street, Syracuse, New York, Property No. 0831002000, for the years 2018/2019, 2019/2020, 2020/2021, and 2021/2022 (July – October) as follows:

Year	Total City/School Taxes owed including principal and interest
2018/2019	$4,315.23
2019/2020	$4,008.65
2020/2021	$3,880.19
2021/2022 (July-October)	$1,730.35
Total:	$13,934.42

and

WHEREAS, the owner of said property, North Area Athletic Club, Inc. has requested that the Common Council waive all City/School taxes including interest for the years 2018/2019, 2019/2020, 2020/2021, and 2021/2022 in the sum of $13,934.42 which are due and owing; NOW, THEREFORE,

BE IT ORDAINED, that this Common Council hereby compromises the unpaid real property taxes for the property situated at 301-303 South Geddes Street & Marcellus Street, Syracuse, New York, for the years 2018/2019, 2019/2020, 2020/2021, and 2021/2022 (July – October), by waiving fees and penalties in the sum of $13,934.42 with no payment due; and

BE IT FURTHER ORDAINED, that the aforementioned compromise is conditioned upon the owner paying the County portion of the taxes for the years listed above including interest, fees

and penalties.

24

DEPARTMENT OF FINANCE

OFFICE OF THE COMMISSIONER
CITY OF SYRACUSE, MAYOR BEN WALSH

Bradley O'Connor CPA
Commissioner of Finance

Michael Cannizzaro, CPA
First Deputy Commissioner

Veronica Voss
Deputy Commissioner

March 29, 2022

Ms. Patricia McBride , City Clerk
230 City Hall
Syracuse, NY 13202

Re: Request for Legislation Waiver of Delinquent Tax Bills – 301-03 South Geddes Street | North Area Athletic Club Inc.

Dear Ms. McBride:

Please prepare legislation to be placed on the agenda for the regularly scheduled Common Council meeting of April 11, 2022 authorizing the waiver of delinquent tax bills owned for the following periods:

Tax Period:	Amount to be Waived:
2018-19 City/School:	$4,315.23
2019-20 City School:	$4,008.65
2020-21 City/School	$3,880.19
2021-22 City/School (July/Oct):	$1,730.35
TOTAL:	**$13,934.42**

The property in question was acquired through foreclosure upon successful purchase of tax liens from the City of Syracuse in 2019, as part of the City of Syracuse's "Brownfield Lien Sale" program. The property faced significant delays with the foreclosure due to the Covid-19 pandemic, and has just recently taken title to the property. The property is undergoing redevelopment and will renovated and assist with the ongoing revitalization of the Geddes Street Business Corridor.

Please contact me with any questions at 315-448-8323.

Sincerely,

Brad O'Connor
Commissioner of Finance

Cc:
Brad O'Connor, Commissioner of Finance
Veronica Voss, Deputy Commissioner of Finance
Michael Collins, Commissioner of NBD

Department of Finance
233 E. Washington St
City Hall, Room 128
Syracuse, N.Y. 13202

Office 315 448 8279
Fax 315 448 8424

www.syrgov.net

City of Syracuse
Department of Finance
233 E Washington St. Room 122
Syracuse, NY 13202
(315) 448-8310
www.syrgov.net

ACCOUNT SUMMARY
As of 03/16/2022

Owner Name:	NORTH AREA ATHLETIC CLUB INC	Property Number:	0831002000
Property Address:	301-03 GEDDES ST S & MARCELLUS S	Tax Map:	100.-13-36.0
Print Date:	03/16/2022	Property Index:	193187
Legal Description:	LOT P1 BL 297 70.50X73.40 MAS BLDG		

NORTH AREA ATHLETIC CLUB INC
307 S GEDDES ST
SYRACUSE NY 13204

Seizable

Current Bills	First	Second	Third	Fourth	Minimum	Total
County 2022	**January**	**April**	**July**	**October**		
ONO	**296.35**	296.31	296.31	296.31	**296.35**	1,185.28
SWR	**117.35**	117.34	117.34	117.34	**117.35**	469.37
WTR	**1.05**	1.05	1.05	1.05	**1.05**	4.20
Interest:	**12.44**	0.00	0.00	0.00	**12.44**	12.44
Paid Tax: Paid Interest: Paid Total: Paid Date:	0.00	0.00	0.00	0.00	0.00	0.00
Due:	**427.19**	414.70	414.70	414.70	**427.19**	1,671.29
City/School 2021/22	**July**	**October**	**January**	**April**		
CTY	**267.87**	**267.85**	**267.85**	267.85	**803.57**	1,071.42
SCH	**458.81**	**458.77**	**458.77**	458.77	**1,376.35**	1,835.12
FLU	**9.86**	**9.85**	**9.85**	9.85	**29.56**	39.41
BUP	**34.22**	**34.21**	**34.21**	34.21	**102.64**	136.85
WF002	**1.76**	**1.76**	**1.76**	1.76	**5.28**	7.04
Interest:	**92.70**	**92.69**	**92.69**	0.00	**278.08**	278.08
Paid Tax: Paid Interest: Paid Total: Paid Date:	0.00	0.00	0.00	0.00	0.00	0.00
Due:	**865.22**	**865.13**	**865.13**	772.44	**2,595.48**	3,367.92
County 2021	**January**	**April**	**July**	**October**		
ONO	**306.64**	**306.63**	**306.63**	**306.63**	**1,226.53**	1,226.53
SWR	**115.52**	**115.52**	**115.52**	**115.52**	**462.08**	462.08
WTR	**1.09**	**1.09**	**1.09**	**1.09**	**4.36**	4.36
COUNTYADV	**0.00**	**0.00**	**0.00**	**38.50**	**38.50**	38.50
Interest:	**50.79**	**50.79**	**50.79**	**50.79**	**203.16**	203.16
Paid Tax: Paid Interest: Paid Total: Paid Date:	0.00	0.00	0.00	0.00	0.00	0.00
Due:	**474.04**	**474.03**	**474.03**	**512.53**	**1,934.63**	1,934.63
Total Current		**Quarters Due: 4,463.62**			**4,957.30**	6,973.84

Delinquent Bills	Tax Sale	Interest	Total
2020-21 City/School	3,660.56	219.63	3,880.19
2019-20 City/School	3,403.03	605.62	4,008.65
2020 County	2,055.18	241.99	2,297.17
2018-19 City/School	3,328.29	986.94	4,315.23
2019 County	2,062.14	485.68	2,547.82
2018 County	2,065.46	729.71	2,795.17
Total Delinquent	**16,574.66**	**3,269.57**	**19,844.23**

Grand Totals	Bill	Interest	Minimum	Total
	23,016.32	**3,763.25**	**24,801.53**	**26,818.07**

City of Syracuse
Department of Finance
233 E Washington St. Room 122
Syracuse, NY 13202
(315) 448-8310
www.syrgov.net

ACCOUNT SUMMARY
As of 03/16/2022

Delinquent Bills:

1. Must be paid with certified funds or cash. No personal checks accepted.
2. Amounts due will increase 1% on the 7th of each month unless paid, entered into a Tax Trust, or the property is seized.

Ordinance No. 2022

ORDINANCE AUTHORIZING A CONTRACT WITH NAVIANT, INC. WITHOUT ADVERTISING OR COMPETITIVE BIDDING RELATIVE TO PROVIDING VARIOUS SOFTWARE AND TECHNOLOGY SERVICES FOR THE CITY OF SYRACUSE ON BEHALF OF THE BUREAU OF INFORMATION TECHNOLOGY

WHEREAS, Section 5-205-A of the Charter of the City of Syracuse, as amended, provides the Mayor shall "award contracts for professional services subject to the approval of the Common Council"; and

WHEREAS, due to it being impracticable to competitively bid said items as a result of the specialized nature of the services required, the City's need to renew or purchase additional software or technology services on an as needed basis at a reasonable cost, and the fact that Naviant, Inc. currently acts as the City's third-party supplier of OnBase to various departments the Mayor has waived the Request for Proposal Process and approved the retention of Naviant, Inc. without advertising or competitive bidding, under the following terms:

(1) Naviant, Inc. is a licensed third-party distributor of various software services, including but not limited to the OnBase, which are currently utilized by various City Departments in their day-to-day operations. The City is hereby authorized to execute a Master Agreement for Naviant, Inc. to serve as a third-party provider of various software and technology services for the City of Syracuse as well as any and all additional licenses, documents and agreements associated with the provision of services under such Master Agreement, on behalf of the Bureau of Information Technology;

(2) Pursuant to the terms of the Master Agreement authorized herein, the City may renew and purchase additional software and related technology services from Naviant, Inc. as needed, including, but not limited to, renewing or purchasing additional OnBase software licenses to be used by various City departments.

(3) The term of the Master Agreement shall be from the date the document has been fully executed by both parties until June 30, 2025; and

(4) The City shall pay Naviant, Inc. an amount not to exceed $300,000.00 for all software and related services to be provided under the Master Agreement;

NOW, THEREFORE,

BE IT ORDAINED, that the Mayor, on behalf of the City of Syracuse, be and he hereby is authorized to execute such Master Agreement, as hereinabove stated, subject to the approval of the Corporation Counsel as to terms, form and execution; and

BE FURTHER IT ORDAINED, that the Director of Information Technology, on behalf of the City of Syracuse, be and hereby is authorized to execute any and all additional licenses, agreements, and documents associated with the provision of services under such Master Agreement, as hereinabove stated, subject to the approval of the Corporation Counsel as to terms, form and execution; and

BE IT FURTHER ORDAINED, that the costs associated with this agreement shall be charged to Budget Account #200862022, Budget Account # 540530 or another appropriate account as designated by the Commissioner of Finance.

25

Office of Information Technology

CITY OF SYRACUSE, MAYOR BEN WALSH

David Prowak
Director

March 25, 2022

Ms. Patricia K. McBride
City Clerk
231 City Hall
Syracuse, NY 13202

Re: Request to Legislation

Dear Ms. McBride,

Please prepare legislation for the next regularly scheduled Common Council meeting to authorize the Bureau of Information Technology to enter into any and all Agreements with Naviant, Inc. to ac as a third-party provider of various software and technology services.
Naviant is a licensed third-party distributor of various software services utilized by City Departments, such as the OnBase software system. The proposed Agreements will act as a means by which the City can renew and purchase additional software or technology services from Naviant The City will not be obligated to purchase any services from Naviant, but instead can opt to purchase software and technology services from Naviant on an as needed basis. The Agreements with Naviant will be approved as to their terms and conditions by the Law Department prior to thei execution.

Additionally, please prepare legislation approving the purchase of various software and technology services under this agreement without competitive bidding or formal advertising by reason of the fact that it is impracticable to bid said items due to the specialized nature of the services required, the City's need to renew or purchase additional software or technology services on an as needed basis at a reasonable cost, and the fact that Naviant currently acts as the City's third-party supplier of OnBase to various departments.

The total value of all renewals or purchases made under this master agreement will not exceed $300,000.00. The term of this agreement shall be from the date of execution until June 30, 2025. All purchases made pursuant to this agreement will be charged to Account # 200862022, Account # 540530 or another appropriate account as designated by the Commissioner of Finance.
If you have any questions or comments regarding this, please contact our office.

Sincerely,

David Prowak

Director of Information Technology

Office of Information Technology
233 E Washington St
Room 423
Syracuse, N.Y. 13202

Office 315 448-8431

www.syrgov.net

15

OFFICE OF MANAGEMENT & BUDGET

CITY OF SYRACUSE, MAYOR BEN WALSH

Timothy M. Rudd
Director

Julie Castellitto
Assistant Director

TO: Mayor Ben Walsh
FROM: Timothy M. Rudd, Director of Management and Budget
DATE: March 28, 2022
SUBJECT: Agreement – Naviant, Inc.

On behalf of the Department of Information Technology, I am requesting the City to enter into any and all Agreements with Naviant, Inc. to act as a third-party provider of various software and technology services.

Naviant is a licensed third-party distributor of various software services utilized by City Departments, such as the OnBase software system. The proposed Agreements will act as a means by which the City can renew and purchase additional software or technology services from Naviant. The City will not be obligated to purchase any services from Naviant, but instead can opt to purchase software and technology services from Naviant on an as needed basis. The Agreements with Naviant will be approved as to their terms and conditions by the Law Department prior to their execution.

Additionally, please approve the purchase of various software and technology services under this agreement without competitive bidding or formal advertising by reason of the fact that it is impracticable to bid said items due to the specialized nature of the services required, the City's need to renew or purchase additional software of technology services on an as needed basis at a reasonable cost, and the fact that Naviant currently acts as the City's third-party supplier of OnBase to various departments.

The total value of all renewals of purchases made under this master agreement will not exceed $300,000. The term of this agreement shall be from the date of execution until June 30, 2025. All purchases made pursuant to this agreement will be charged to Account #200862022, Account #540530 or another appropriate account as designated by the Commissioner of Finance.

Please indicate your concurrence by signing below and returning this memo to me so that I may forward a copy to the Common Council along with the legislation request for the next Common Council Meeting.

Thank you for your attention regarding this matter.

Mayor Ben Walsh
City of Syracuse, New York

3/30/2022
Date

Office of Management and Budget
233 E Washington St
Room 213
Syracuse, N.Y. 13202

Office 315 448-8252
Fax 315 448-8116

www.syrgov.net

26

Local Law No. **2022**
City of Syracuse

A LOCAL LAW OF THE CITY OF SYRACUSE TO AMEND THE ANNUAL BUDGET OF THE CITY OF SYRACUSE FOR FISCAL YEAR 2020/2021 TO REFLECT SALARY INCREASES PURSUANT TO A CONTRACT NEGOTIATED BETWEEN THE CITY OF SYRACUSE AND THE CIVIL SERVICE EMPLOYEES ASSOCIATION, UNIT 7801

BE IT ENACTED, by the Common Council of the City of Syracuse, as follows:

Section 1. Pursuant to Ordinance No. _____ approving the negotiated contract between the Civil Service Employees Association, Inc. (CSEA), Unit 7801 and the City of Syracuse, effective January 1, 2021 through December 31, 2025, which includes wage increases for employees covered by said contract and which increases are retroactively effective as of January 1, 2021, as set forth in the labor contract on file with the City Clerk, and subject to the approval of the Mayor who shall have the power and authority to change and increase the salary, compensation and benefits of those employees covered by the aforementioned contract, said salary, compensation and benefits shall be paid from the Treasury of the City of Syracuse in the fiscal year 2020/2021 notwithstanding the fact that any such salary, compensation and benefits shall previously have been fixed or provided for in the budgets of said City for such fiscal years 2020/2021, provided, however, that any such increases shall be within the total amount contained in the budgets for such fiscal year and within such additional amounts as may be legally available therefor. The change herein authorized shall be effective as of January 1, 2021.

Section 2. The annual budget of the City of Syracuse for the year 2020/2021 be and the same are hereby amended to reflect the increases and changes for employees covered by the aforementioned contract.

Section 3. Article 2-C, Section 25 of the General City Law, insofar as it restricts or is inconsistent with the provisions of Section 1 through 2 of this Local Law is hereby superseded.

Section 4. This local law shall take effect immediately.

26

OFFICE OF MANAGEMENT & BUDGET

CITY OF SYRACUSE, MAYOR BEN WALSH

Timothy M. Rudd
Director

Julie Castellitto
Assistant Director

March 29, 2022

Ms. Patricia McBride
City Clerk
231 City Hall
Syracuse, New York 13202

RE: Request for Legislation

Dear Ms. McBride,

On behalf of the Office of the Mayor, please prepare legislation to be introduced at the next Common Council meeting. Please prepare the following legislation: A local law to amend the City Budget for July 2020 – June 2021 to reflect wage increases that were awarded to the Civil Service Employees Association (CSEA), Inc.

Thank you for your assistance in this matter.

Sincerely,

Timothy M. Rudd
Director of Management and Budget

Office of Management
and Budget
233 E Washington St
Room 213
Syracuse, N.Y. 13202

Office 315 448-8252
Fax 315 448-8116

www.syrgov.net

16

GROWTH. DIVERSITY. OPPORTUNITY FOR ALL.

OFFICE OF MANAGEMENT & BUDGET

CITY OF SYRACUSE, MAYOR BEN WALSH

Timothy M. Rudd
Director

Julie Castellitto
Assistant Director

TO: Mayor, Ben Walsh
FROM: Timothy M. Rudd, Director of Management and Budget
DATE: March 29, 2022
SUBJECT: Labor Agreement with the Civil Service Employees Association (CSEA)

On behalf of the Office of the Mayor, I am requesting the City to enter into a labor agreement between the City of Syracuse and Civil Service Employees Association (CSEA). This five year labor agreement runs from January 1, 2021 through December 31, 2025 and provides the general wage increases listed below. The City and the CSEA have signed a tentative agreement, which is attached.

Wages	
Effective 1/1/21	3%
Effective 1/1/22	3%
Effective 1/1/23	3%
Effective 1/1/24	3%
Effective 1/1/25	3%

Please indicate your concurrence by signing below and returning this memo to me so that I may forward a copy to the Common Council along with the legislation request for the next Common Council Meeting.

Thank you for your attention regarding this matter.

Mayor Ben Walsh
City of Syracuse, New York

3/30/2022
Date

Office of Management and Budget
233 E Washington St
Room 213
Syracuse, N.Y. 13202

Office 315 448-8252
Fax 315 448-8116

www.syrgov.net

Ordinance No. 2022

ORDINANCE AUTHORIZING AN AGREEMENT BETWEEN THE CITY OF SYRACUSE AND THE CIVIL SERVICE EMPLOYEES ASSOCIATION, INC. (CSEA) UNIT 7801 FOR A FIVE YEAR PERIOD FROM JANUARY 1, 2021 THROUGH DECEMBER 31, 2025

BE IT ORDAINED, that the tentative agreement between the City of Syracuse and the Civil Service Employees Association, Inc. (CSEA) Unit 7801, effective January 1, 2021 through December 31, 2025, which is on file with the City Clerk and before this Common Council at the time of the adoption of this ordinance be and the same is hereby in all respects ratified, confirmed and approved; and

BE IT FURTHER ORDAINED, that the Mayor of the City of Syracuse be and he hereby is authorized and directed to execute such agreement for and on behalf of the City of Syracuse in the manner provided by law; and

BE IT FURTHER ORDAINED, that said agreement shall contain such other and further provisions as may be deemed by the Corporation Counsel to be in the best interest of the City and as shall be approved by her as to legality, form and manner of execution.

27

OFFICE OF THE MAYOR

MAYOR BEN WALSH

March 28, 2022

Patricia McBride
City Clerk
231 City Hall
Syracuse, NY 13202

Ordinance and Local Law Request For A Labor Agreement With the Civil Service Employees Association (CSEA), Inc. Unit 7801

Dear City Clerk McBride:

Please have legislation prepared for the next meeting of the Common Council to authorize a labor agreement between the City of Syracuse and the Civil Service Employees Association (CSEA). This five year labor agreement runs from January 1, 2021 through December 31, 2025 and provides for the general wage increases listed below. The City and CSEA have a tentative agreement, which is attached.

Wages

Effective 1/1/21	3%
Effective 1/1/22	3%
Effective 1/1/23	3%
Effective 1/1/24	3%
Effective 1/1/25	3%

Additionally, please be advised a separate local law to amend the City Budget for July 2020 – July 2021 is needed to accommodate the proposed wage increases.

Regards,

Frank Caliva
Chief Administrative Officer

cc: Tim Rudd, Budget Director

Office of the Mayor
233 E. Washington St.
201 City Hall
Syracuse, N.Y. 13202

Office 315 448 8005
Fax 315 448 8067

www.syrgov.net

17

TENTATIVE AGREEMENT BETWEEN THE CITY OF SYRACUSE AND CSEA FOR SUCCESSOR CBA 2.24.2022

CITY OF SYRACUSE

1. GENERAL CONTRACT REFERENCES:

A. ALL REFERENCES TO HE/HIM/SHE/HER IN THE SUCCESSOR CBA SHALL BE REFERENCED AS THEY/THEM/THEIR.

B. FOR CONTINUITY PURPOSES, ALL REFERENCES IN SUCCESOR CBA TO "ASSOCIATION" SHALL BE CHANGED TO "UNION."

2. ARTICLE 2 - NEGOTIATING UNIT:

SECTION 2.3: TEMPORARY AND SEASONAL EMPLOYEES

APPLICATION OF THE BENEFITS CHANGES TO THE TEMPORARY AND SEASONAL EMPLOYEES AS TA'D BY THE CSEA BARGAINING UNIT.

3. ARTICLE 4 - UNION SECURITY:

SECTION 4.4:

IT IS AGREED THAT THE UNION MAY USE UNION BULLETIN BOARDS FOR THE PURPOSE OF POSTING UNION NOTICES TO UNION MEMBERS, PROVIDED THAT SUCH NOTICES SHALL BE APPROVED BY CSEA LEADERSHIP PRIOR TO POSTING AND NOTICES SHALL CLEARLY BE IDENTIFIED AS UNION NOTICES BY STATING CSEA ON THE NOTICES. ALL POSTED NOTICES SHALL BE NON-POLITICAL AND SHALL BE NON-DEROGATORY IN CHARACTER.

4. ARTICLE 6 - SALARY AND WAGES:

SECTION 6.1 SALARY AND WAGES

EFFECTIVE JANUARY 1, 2021:	3% INCREASE
EFFECTIVE JANUARY 1, 2022:	3% INCREASE
EFFECTIVE JANUARY 1, 2023:	3% INCREASE
EFFECTIVE JANUARY 1, 2024:	3% INCREASE
EFFECTIVE JANUARY 1, 2025:	3% INCREASE

Employees covered by this Agreement who were hired prior to September 30, 1987 shall be paid pursuant to the Salary Schedule Appendices C, D, E and F, effective on the date indicated.

Employees covered by this agreement who were hired after September 30, 1987 shall be paid pursuant to the Salary Schedule Appendices C, D, E, and F, effective on the date indicated.

SECTION 6.2 Any employee below Step 5 (Step 7 for those employees hired after September 30, 1987), shall receive an increase to the next salary level above his/her current rate of pay on the first full pay period after his/her anniversary date of seniority.

SECTION 6.3 The City agrees that in the event that a new employee is offered a bargaining unit position at a rate of pay higher than step I of the grade, the City shall first notify the union.

5. SECTION 6.4 - GENERAL SALARY PROVISIONS

A. EFFECTIVE JANUARY 1, 2022, THE PRESENT PRACTICE AND PROCEDURE FOR LONGEVITY PAY IS AS FOLLOWS:

YEARS OF SERVICE	LONGEVITY PAY
8	$500.00
9	$500.00
10	$ 950.00
15	$ 1,350.00
20	$ 1,850.00
25	$ 2,150.00
30	$ 2,450.00
35	$ 2,750.00

OTHER THAN YEARS 8 AND 9, THE ABOVE AMOUNTS REFLECT PAYMENTS ADDED TO EACH FIVE-YEAR INCREMENT AFTER TEN YEARS OF SERVICE.

The longevity payment shall begin in the payroll period following the completion of the required length of service necessary to qualify for longevity payment.

B. Any employees who are compensated for the use of his/her own motor vehicle shall receive an annual allowance of $1950, effective January 1, 2007, and $2200 effective January 1, 2008.

Additionally, all Meter Readers who use their automobiles shall be paid a car allowance of $825, effective January 1, 2007; Effective January 1, 2008, increase to $925. Those Meter Readers not using their automobiles will continue to receive the bus token allowance presently in effect.

C. Effective November 1, 2013 the City will provide a vehicle to the Housing Inspectors on a rotating basis for the term of this agreement. This provision shall be on a trial basis for the term of this agreement through December 31, 2015 and shall continue thereafter should both parties agree.

D. THE CITY AGREES TO PAY THE CURRENT IRS RATE PER MILE ON ORDERED TRAVEL DIRECTLY BY THE DEPARTMENT HEAD OR MAYOR.

E. The City shall provide all new hires in the titles of Parking Checkers, Creek Guard, Park Attendant, and Community Service Officer, a $200 uniform allowance upon the completion of six months employment in that title. The payment shall be made in the next full pay period following the completion of six months of service in the aforementioned titles. The City shall, thereafter, pay a uniform maintenance allowance of $400 to all employees in the specified titles (who have attained six months seniority) in the second paycheck in January. Effective January 1, 2008, this amount will increase to $500.

Meter Reader and Dog Control Officer I will continue to have uniform replacements upon reasonable request.

F. ALL EMPLOYEES WITH SIX MONTHS OF SERVICE IN THE TITLES OF CLOSED CIRCUIT T.V. OPERATOR, BITUMINOUS LAB TECHNICIAN AND ASPHALT RECYCLING PLANT OPERATOR, CIVIL ENGINEERS, ENGINEERING TECHNICIANS, AND INSPECTORS, SHALL RECEIVE AN ANNUAL UNIFORM ALLOWANCE OF $150.00 IN THE SECOND PAYCHECK IN JANUARY. NEW EMPLOYEES IN THESE TITLES SHALL RECEIVE THE $150.00 AFTER THEY HAVE ATTAINED SIX MONTHS OF SERVICE IN ONE OF THESE TITLES. THE PAYMENT SHALL BE PAID IN THE PAYCHECK FOLLOWING THE ATTAINMENT OF SIX MONTHS OF SERVICE. EFFECTIVE JANUARY 1, 2005 THE UNIFORM ALLOWANCE WILL INCREASE TO $175.00. EFFECTIVE JANUARY 1, 2008 THE UNIFORM ALLOWANCE WILL INCREASE TO $275.00.

G. COMMUNITY SERVICE OFFICERS EMPLOYED WITH THE SYRACUSE POLICE DEPARTMENT SHALL RECEIVE A $50.00 CLOTHING ALLOWANCE FOR THE COST OF PURCHASING A CASUAL POLO SHIRT WITH THE "SYRACUSE POLICE DEPARTMENT" LOGO.

H. BILINGUAL EMPLOYEES WHO ARE REQUESTED TO TRANSLATE AS PART OF THEIR JOB DUTIES SHALL RECEIVE AN ANNUAL STIPEND OF $250.00.

6. ARTICLE 7 – WORK BREAKS

IT IS AGREED THAT EACH EMPLOYEE SHALL BE ALLOWED ONE FIFTEEN (15) MINUTE BREAK EACH DAY.

7. ARTICLE 9 – OVERTIME PAY

ALL WORK PERFORMED ON THE SEVENTH CONSECUTIVE DAY SHALL BE PAID AT DOUBLE THE EMPLOYEE'S NORMAL RATE OF PAY. IF THE EMPLOYEE IS WORKING OUT-OF-TITLE, ALL WORK PERFORMED ON THE SEVENTH CONSECUTIVE DAY SHALL BE PAID AT DOUBLE THE EMPLOYEE'S OUT-OF-TITLE PAY.

8. ARTICLE 9.3 - COMPENSATORY TIME

A. EMPLOYEES WHO ARE HIRED BY THE CITY FOLLOWING RATIFICATION OF THIS AGREEMENT SHALL NOT ACCRUE MORE THAN A TOTAL OF 120 HOURS OF COMPENSATORY TIME. THE CITY AGREES TO PROVIDE ON A QUARTERLY BASIS TO THE UNION A REPORT INDICATING OVERTIME PAID TO DATE.

B. FOR EMPLOYEES WHO ARE HIRED BY THE CITY FOLLOWING RATIFICATION OF THIS AGREEMENT, COMPENSATORY TIME SHALL BE ACCUMULATED AT THE SAME RATE AS OVERTIME PAY (I.E. TIME AND ONE-HALF (1 ½) OR DOUBLE TIME). ADDITIONALLY, COMPENSATORY TIME THAT IS ACCUMULATED TO A MAXIMUM OF 120 HOURS, MAY BE CARRIED OVER ANNUALLY AND IS PAYABLE AT 1) AT THE TIME OF SEPARATION FROM SERVICE, OR 2) PROMOTION OR TRANSFER TO A DIFFERENT UNIT WITH MORE RESTRICTIVE PROVISIONS ON THE ACCRUAL AND PAYMENT OF COMPENSATORY TIME. THE MAXIMUM AMOUNT OF COMPENSATORY TIME IN ANY YEAR CANNOT EXCEED 120 HOURS. THE AMOUNT PAYABLE AT SEPARATION, PROMOTION, OR TRANSFER IS A MAXIMUM OF 120 HOURS.

9. ARTICLE 11 - HOSPITALIZATION AND MEDICAL COVERAGE

NEGOTIATED BETWEEN THE PARTIES:

SECTION 11.1 THE CITY AGREES TO CONTINUE TO PROVIDE HEALTH INSURANCE COVERAGE TO MEMBERS OF THE ASSOCIATION. BARGAINING UNIT MEMBERS WHO ARE EMPLOYED WITH THE CITY ON THE DATE OF RATIFICATION OF THE AGREEMENT SHALL BE RESPONSIBLE FOR HEALTHCARE CONTRIBUTIONS OF $76.00 PER MONTH FOR SINGLE COVERAGE AND $142.00 FOR FAMILY COVERAGE. THE ABOVE LISTED MONTHLY CONTRIBUTIONS FOR MEMBERS WILL BE DEDUCTED ON A BI-WEEKLY BASIS.

EFFECTIVE JANUARY 1, 2024, BARGAINING UNIT MEMBERS WHO WERE EMPLOYED WITH THE CITY ON THE DATE OF RATIFICATION OF THE AGREEMENT SHALL BE RESPONSIBLE FOR HEALTHCARE CONTRIBUTIONS OF $86.00 PER MONTH FOR SINGLE COVERAGE AND $152.00 FOR FAMILY COVERAGE.

BARGAINING UNIT MEMBERS WHO BECOME EMPLOYED WITH THE CITY AFTER THE DATE OF RATIFICATION OF THE AGREEMENT SHALL BE RESPONSIBLE FOR HEALTHCARE CONTRIBUTIONS BASED ON THE FOLLOWING SCHEDULE BASED ON THE BARGAINING UNIT MEMBER'S BASE SALARY, WHICH REPRESENTS A PERCENTAGE OF THE PREMIUM CONTRIBUTION AS SET FORTH BELOW. THE DOLLAR FIGURE ASSOCIATED WITH SAID PREMIUM CONTRIBUTION IS SUBJECT TO CHANGE DEPENDING ON THE TOTAL PREMIUM AMOUNT ASSESSED TO THE CITY:

Base Salary	Premium Contribution %	Single Coverage Monthly	Family Coverage Monthly
up to $42,000	10%	$76.04	$208.87
$42,001-$59,999	15.00%	$114.05	$313.31
$60,000-$79,999	18%	$136.86	$375.97
$80,000-$99,999	20%	$152.07	$417.74
$100,000 and up	25.00%	$190.09	$522.18

10. ARTICLE 12 – DENTAL INSURANCE

DENTAL INSURANCE SHALL BE ADDRESSED IN THE HEALTHCARE COALITION.

11. ARTICLE 13 - LEAVE OF ABSENCE WITH PAY

Section 13.1 Sick Leave

A. An employee contracting or incurring any non-service connected sickness or disability which renders such employee unable to perform the duties of his/her employment shall be eligible for sick leave.

B. Employees shall earn sick leave at the rate of 1¼ days per month. An employee who is on sick leave for the entire month does not earn any additional sick leave credits.

   New employees hired after February 8, 1993 shall accrue sick leave from date of hire but shall not be eligible for sick leave usage until they have completed fifty-two (52) weeks of continuous service.

C. The City, at its option, may require a doctor's certificate after an employee is absent from work four (4) consecutive days or any six (6) non-consecutive days within one calendar year.

D. Where an employee has insufficient sick time accrued to be paid for a leave, such leave shall be considered an unauthorized absence and subject to disciplinary action unless such leave is covered by the qualifying criteria under the Family Medical Leave Act (FMLA).

E. If an employee is absent for more than 30 days within a calendar year, the City may require that employee submit to an examination by a physician appointed by the City at the City's expense. The findings of the physician shall be final and not grievable.

F. An employee may accumulate up to 230 days of sick leave, effective January 1, 2008.

G. Employees who are unable to perform the duties of their employment because of injuries received in the service of the City and who receive Worker's Compensation benefits shall be eligible to receive a supplemental sum equal to the difference between their wages and their compensation benefits; but such supplemental sum shall be deducted from sick leave credits not to exceed the total amount of accumulation.

H. Effective 1/1/08 employees who are unable to return to work after twelve (12) continuous months on Workers Compensation benefits shall be terminated under Section 71 of the NYS Civil Service law. All employees terminated under Section 71 shall

be advised of their reinstatement /recall rights. Similarly, employees on Urban Renewal Payroll who are unable to return to work after twelve (12) continuous months on Workers Compensation benefits shall be terminated. Urban Renewal Payroll employees shall be advised, should they recover from their disability within one year of their termination date, they can be reinstated to their former position under the following conditions:

1. A doctor's certification, acceptable to the City, is provided which clears them to return to work with no restrictions and the City, at its sole discretion, may seek a second medical opinion from a physician paid for by the City; and

2. Their formerly held position is still vacant.

In those cases involving the urban renewal payroll where the formerly held position is not vacant or has been eliminated, the affected individual will be placed on a recall list for that position for a period of 36 months.

I. Sick Leave Conversion at Retirement – Effective January 1, 2005, the City will implement Section 41-j of the New York State Retirement and Social Security Law. This section allows for up to a maximum of 165 days of unreimbursed sick days to be calculated towards service credit.

J. An employee may receive, at the time of retirement, a cash payment of $30/day up to a maximum of 65 unused sick days in excess of 165 days for a total cash payment of $1,950. Payment shall be made in the employee's final paycheck. Inclusion to the employee's final average salary for retirement benefit purposes shall be determined by the New York State Employees' Retirement System rules and regulations.

Example

a)	Accumulated and unused sick days	200
b)	Less 165 days for 41j	35
c)	Dollar value per day	$ 30
d)	Final entitlement payment	$ 1,050

12. SECTION 13.2 BEREAVEMENT LEAVE AND FAMILY ILLNESS

A. 1. Bereavement Leave – Each employee in the defined bargaining unit shall be allowed up to four (4) working days with pay for each death of members of the family on satisfactory evidence of such. For purposes of this section the following relations of the employee shall be defined and shall be eligible for such time off: spouse, parent, stepparents, parent-in-law, child(ren), stepchild(ren), child(ren)-in-law, grandparent, grandparent of spouse, grandchild(ren), sibling, and sibling-in-law.

It is further agreed that each employee in the defined bargaining unit may be allowed any additional time off with pay in units not to exceed a maximum of four (4) days for the above mentioned family members, with the expressed and specific approval of the department head.

2. In the event of the death of an employee's piblings[1] and/or niblings,[2] the employee will be given the day of the funeral off without loss of pay provided such day is a regular scheduled work day and the employee actually attends the funeral. In special circumstances, an additional day may be granted with the expressed and specific approval of the department head.

B. 1. FAMILY ILLNESS – EMPLOYEES WITHIN THE DEFINED BARGAINING UNIT SHALL BE ENTITLED TO UP TO THREE (3) DAYS OF PAID ABSENCE FROM WORK IN THE EVENT OF ILLNESS IN THE EMPLOYEE'S FAMILY (AS DESCRIBED IN PARAGRAPH A.1. ABOVE) AND THESE THREE (3) DAYS OF PAID ABSENCE SHALL NOT BE CHARGEABLE TO THE EMPLOYEE'S ACCRUED SICK LEAVE. REQUESTS FOR LEAVE FOR FAMILY ILLNESS SHALL BE SUBJECT TO THE APPROVAL OF THE DEPARTMENT HEAD. SUCH APPROVAL SHALL NOT BE UNREASONABLY WITHHELD. SATISFACTORY DOCUMENTATION OF SUCH ILLNESS MAY BE REQUESTED BY THE DEPARTMENT HEAD; IF THERE IS REASON TO BELIEVE THE LEAVE IS BEING ABUSED OR IN THE CASE WHERE THE ILLNESS LEAVE EXCEEDS TWO CONSECUTIVE DAYS, MEDICAL DOCUMENTATION MAY THEN BE REQUIRED.

2. FURTHER, EMPLOYEES WITHIN THE DEFINED BARGAINING UNIT SHALL BE ENTITLED TO CHARGE ADDITIONAL ABSENCES FROM WORK IN THE EVENT OF ILLNESS IN THE EMPLOYEE'S FAMILY (AS DESCRIBED IN PARAGRAPH A.1 ABOVE) AGAINST THE EMPLOYEE'S ACCRUED SICK LEAVE CREDITS UP TO A MAXIMUM OF EIGHT (8) WORKING DAYS IN ANY ONE CALENDAR YEAR. REQUESTS FOR LEAVE FOR FAMILY ILLNESS SHALL BE SUBJECT TO THE APPROVAL OF THE DEPARTMENT HEAD. SUCH APPROVAL

[1] Formerly referred to as "aunts and uncles."
[2] Formerly referred to as "nieces and nephews."

SHALL NOT BE UNREASONABLY WITHHELD. SATISFACTORY DOCUMENTATION OF SUCH ILLNESS MAY BE REQUESTED BY THE DEPARTMENT HEAD; IF THERE IS REASON TO BELIEVE THE LEAVE IS BEING ABUSED OR IN THE CASE WHERE THE ILLNESS LEAVE EXCEEDS TWO CONSECUTIVE DAYS, MEDICAL DOCUMENTATION MAY THEN BE REQUIRED. USAGE OF THE EIGHT (8) SICK DAYS WILL NOT BE CHARGED AGAINST THE PROVISIONS IN SECTION 13.1C AND 13.1D.

3. Annually up to six (6) whole unused Family Illness that would otherwise be charged against the employees sick leave credits shall be converted in a ratio of 2 to 1 to personal sick leave for use by the member. For example, six (6) unused Family Illness days shall be converted to three (3) personal sick days; five (5) unused Family Illness days shall be converted to two and a half (2.5) personal days sick days.

EMPLOYEES MUST UTILIZE THE FAMILY ILLNESS BENEFIT AS SET FORTH IN PARAGRAPH B.1 PRIOR TO CHARGING ADDITIONAL ABSENCES FROM THE EMPLOYEE'S ACCRUED SICK LEAVE. THE FAMILY ILLNESS BENEFIT SET FORTH IN PARAGRAPH B.1 IS NOT SUBJECT TO THE CONVERSION NOTED IN IN PARAGRAPH B.3.

Section 13.3 Effective 1/1/95 medical visits shall be permitted at the discretion of the department head but shall not be unreasonably denied and shall not exceed two (2) hours duration for a total of twenty-four (24) hours per calendar year without loss of pay. It is agreed that application for this type of leave shall be made at least 24 hours in advance to the department head whenever practicable.

It is further agreed that employees that have reached the maximum of twenty-four (24) hours or need more than the two (2) hours allotment may use other available time (i.e. sick time, vacation time, personal or compensatory time) in one hour increments.

Section 13.4 Employees who are required to be absent from work to serve as jurors shall be paid for the time actually lost from work, less any amount received, by the employee as juror fees. Any employee in the defined bargaining unit who is subpoenaed as a witness in a court proceeding, other than those involving personal interest or personal interest of his/her relatives or friends shall receive leave with pay, provided that there is no compensation other than the usual subpoena fees. Employees who are required to be absent for one of the reasons set forth in this paragraph shall give the Commissioner at least forty-eight (48) hours advance notice. Employees who are excused at any time before 12:30 p.m. on any days on which they are serving their civic duty must return to work for the remainder of the day.

13. NEW ARTICLE: ARTICLE 13.9: PAID PARENTAL LEAVE

UPON RATIFICATION OF THIS AGREEMENT, THE CITY SHALL PROVIDE ELIGIBLE BARGAINING UNIT MEMBERS COVERED BY THIS AGREEMENT WITH TWELVE (12) CONSECUTIVE WEEKS OF PAID PARENTAL LEAVE (REFERRED TO AS "PL") UPON THE BIRTH OR ADOPTION OF A CHILD, OR THE PLACEMENT OF A FOSTER CHILD WITH AN EMPLOYEE, AS SET FORTH AS FOLLOWS:

PARENTAL LEAVE

I. INTRODUCTION

PARENTAL LEAVE ("PL") MEANS THE RIGHT OF AN ELIGIBLE EMPLOYEE REPRESENTED BY CSEA AND EMPLOYED BY THE CITY OF SYRACUSE (THE CITY) TO TAKE AN APPROVED, PAID LEAVE, NOT TO EXCEED TWELVE (12) CONSECUTIVE WEEKS, UNDER THE CIRCUMSTANCES AND RULES DESCRIBED HEREIN. DURING THE PERIOD OF THE APPROVED, PAID LEAVE, THE CITY WILL CONTINUE THE EMPLOYEE'S HEALTH INSURANCE WITHOUT INTERRUPTION. THE APPLICATION OF THE PARENTAL LEAVE PROGRAM IS NOT SUBJECT TO THE GRIEVANCE OR ARBITRATION PROCEDURE IN THE APPLICABLE COLLECTIVE BARGAINING AGREEMENT.

II. EFFECTIVE DATE

UPON RATIFICATION OF THIS AGREEMENT.

III. DEFINITIONS

FOR PURPOSES OF THIS AGREEMENT ONLY, "ACTIVE STATUS" SHALL MEAN AN ELIGIBLE EMPLOYEE WHO IS ON (I) PAYROLL, USING SICK TIME, ON ANNUAL LEAVE, ON A PAID LEAVE, OR ON PARENTAL LEAVE, (II) UNPAID LEAVE FOR A PREGNANCY RELATED CONDITION, (III) ON A LEAVE PURSUANT TO THE UNIFORMED SERVICES EMPLOYMENT AND REEMPLOYMENT RIGHTS ACT ("USERRA"); OR ON (IV)

ANOTHER STATUTORY LEAVE AND/OR UNPAID LEAVE DUE TO A MEDICALLY DISPUTED WORKERS' COMPENSATION INJURY.

IV. COVERED EVENTS

THE FOLLOWING ARE EACH A COVERED EVENT FOR WHICH AN ELIGIBLE EMPLOYEE, BIRTH OR NON-BIRTH PARENT, CAN TAKE PARENTAL LEAVE:

A. BIRTH OF A CHILD (OR CHILDREN) OF AN ELIGIBLE EMPLOYEE;

B. THE ADOPTION AND PLACEMENT OF A CHILD (OR CHILDREN) UNDER THE AGE OF SIX IN THE HOME OF AN ELIGIBLE EMPLOYEE; AND

C. THE FOSTER CARE PLACEMENT OF A CHILD (OR CHILDREN) UNDER THE AGE OF SIX IN THE HOME OF AN ELIGIBLE EMPLOYEE.

V. INITIAL ELIGIBILITY

TO BE ELIGIBLE TO TAKE THEIR FIRST PL, AN ELIGIBLE EMPLOYEE MUST HAVE BEEN ON THE CITY OF SYRACUSE'S PAYROLL FOR A TOTAL OF TWELVE (12) CALENDAR MONTHS DURING THEIR EMPLOYMENT COMMENCING FROM THE EMPLOYEE'S MOST RECENT DATE OF HIRE, WHICH NEED NOT BE CONSECUTIVE, AND FOR PURPOSES OF ELIGIBILITY UNDER THIS SECTION, TIME ON AN UNPAID LEAVE.

VI. ELIGIBILITY FOR ANOTHER PL

AN ELIGIBLE EMPLOYEE WHO HAS TAKEN A PL MAY ONLY TAKE PL AGAIN AFTER THE EMPLOYEE HAS BEEN IN ACTIVE STATUS FOR 10 CALENDAR MONTHS FOLLOWING THE COVERED EVENT, EXCLUSIVE OF ANY TIME SINCE THE COVERED EVENT FOR A NON-STATUTORY LEAVE WITHOUT PAY OF UP TO 10 MONTHS, (I.E., AN EMPLOYEE IS NOT ELIGIBLE FOR PARENTAL LEAVE AGAIN UNTIL 10 CALENDAR MONTHS HAVE PASSED FROM THE DATE OF THE COVERED EVENT AND THEY HAS RETURNED TO ACTIVE

STATUS FOR AN ADDITIONAL AMOUNT OF TIME EQUAL TO THE LENGTH EITHER OF THEIR NON-STATUTORY LEAVE WITHOUT PAY OR FOR 10 CONSECUTIVE MONTHS, WHICHEVER IS SHORTER.)

IN THE EVENT THAT AN EMPLOYEE HAS A DOCUMENTED DUE DATE FOR THE BIRTH OF A CHILD (OR CHILDREN) AFTER THE REQUIRED TIME PERIOD (I.E., 12 OR 10 CALENDAR MONTHS) FOR PL ELIGIBILITY, AND THE CHILD (OR CHILDREN) HAS A MEDICALLY DOCUMENTED PREMATURE BIRTH PRIOR TO SERVING THE REQUIRED TIME, THE EMPLOYEE WILL STILL BE ELIGIBLE FOR PARENTAL LEAVE.

VII. NON-BIRTH PARENTS

NON-BIRTH PARENTS MAY TAKE TWELVE (12) WEEKS OF PARENTAL LEAVE STARTING ON THE DAY OF THE COVERED EVENT AND ENDING NO LATER THAN THE LAST DAY OF THE 12TH WEEK AFTER THE COVERED EVENT, EXCEPT WHERE BOTH PARENTS WORK FOR THE CITY.

VIII. RETURN FROM PL

A. A CSEA-REPRESENTED EMPLOYEE MUST RETURN FROM PARENTAL LEAVE TO ACTIVE STATUS FOR A TOTAL OF 12 CALENDAR MONTHS WHICH NEED NOT BE CONSECUTIVE FOLLOWING PARENTAL LEAVE.

B. AN EMPLOYEE WHO DOES NOT RETURN TO ACTIVE STATUS FOR A TOTAL OF 12 CALENDAR MONTHS, WHICH NEED NOT BE CONSECUTIVE, FOLLOWING PARENTAL LEAVE (OR OTHER APPROVED LEAVE(S) TAKEN CONSECUTIVELY AFTER THE PARENTAL LEAVE) WILL BE REQUIRED TO PAY BACK THE PARENTAL LEAVE BENEFIT TO THE CITY, UNLESS SPECIAL CIRCUMSTANCES, AS DEFINED HEREIN, PREVENTED THE EMPLOYEE FROM RETURNING FOR SOME OR ALL OF THE TIME.

C. NOTWITHSTANDING THE REQUIREMENT TO RETURN FOR A TOTAL OF 12 CALENDAR MONTHS, AN EMPLOYEE MAY TAKE AN ADDITIONAL PARENTAL LEAVE WHEN THE EMPLOYEE HAS BEEN IN ACTIVE STATUS FOR 10 CALENDAR MONTHS FOLLOWING THE COVERED EVENT IN ACCORDANCE WITH SECTION V OF THIS AGREEMENT.

IF AN EMPLOYEE TAKES AN ADDITIONAL PARENTAL LEAVE PRIOR TO HAVING RETURNED TO ACTIVE STATUS FOR A TOTAL OF 12 CALENDAR MONTHS, THE EMPLOYEE MUST STILL RETURN TO ACTIVE STATUS FOR A TOTAL OF 12 CALENDAR MONTHS FOLLOWING THEIR FINAL PARENTAL LEAVE.

FAILURE TO RETURN TO ACTIVE STATUS FOR A TOTAL OF 12 CALENDAR MONTHS WILL RESULT IN THE EMPLOYEE BEING REQUIRED TO PAY BACK THE MOST RECENT PL BENEFIT THE EMPLOYEE RECEIVED.

D. CSEA AND THE CITY SHALL WORK TOGETHER TO COLLECT ANY AMOUNT TO BE PAID BACK TO THE CITY.

IX. PARENTAL LEAVE GENERAL REQUIREMENTS

A. PL MUST BE TAKEN CONSECUTIVELY RATHER THAN ON AN INTERMITTENT BASIS.

B. AN EMPLOYEE IS NOT PERMITTED TO WORK FOR ANY OTHER EMPLOYER WHILE ON PL.

C. PL RUNS CONCURRENTLY WITH ANY FMLA LEAVE THE EMPLOYEE IS ELIGIBLE FOR.

D. IN THE CASE OF THE BIRTH OF MULTIPLE CHILDREN FROM ONE PREGNANCY, ALL CHILDREN ARE TREATED AS ONE COVERED EVENT. IN THE CASE OF MULTIPLE CHILDREN BEING ADOPTED OR PLACED IN FOSTER CARE, ALL CHILDREN BEING ADOPTED OR PLACED IN FOSTER CARE ON THE SAME DAY ARE TREATED AS ONE COVERED EVENT. IN THE CASES OF MULTIPLE QUALIFYING EVENTS FOR THE SAME CHILD BY THE SAME EMPLOYEE, THE ELIGIBLE EMPLOYEE WILL BE ENTITLED TO ONLY ONE INSTANCE OF PL.

E. EMPLOYEES WHO ARE NOT ELIGIBLE FOR PARENTAL LEAVE MAY CONTINUE TO USE WHATEVER LEAVE, IF ANY, IS AVAILABLE TO THEM UNDER EXISTING COLLECTIVE BARGAINING AGREEMENTS, POLICIES AND PRACTICES, AND APPLICABLE LAW.

F. FOR PURPOSES OF THIS AGREEMENT, A PERSON WHO BECOMES A CHILD'S PARENT AS A RESULT OF SURROGACY SHALL BE TREATED AS IN THE SAME MANNER AS A PERSON WHO ADOPTS A CHILD; THEY ARE ELIGIBLE FOR PARENTAL LEAVE. CSEA MEMBERS COVERED BY THIS AGREEMENT WHO ARE SURROGATES THEMSELVES ARE NOT ELIGIBLE FOR PARENTAL LEAVE.

G. NOTHING HEREIN SHALL LIMIT ANY RIGHT THAT AN EMPLOYEE HAS UNDER FEDERAL, STATE OR LOCAL LAW.

H. EXCEPT AS EXPRESSLY PROVIDED HEREIN, NOTHING IN THIS AGREEMENT SHALL CONSTITUTE A MODIFICATION OF, LIMITATION ON, OR WAIVER OF ANY PROVISION OF ANY COLLECTIVE BARGAINING AGREEMENT BETWEEN THE PARTIES.

14. ARTICLE 14 - LEAVE OF ABSENCE WITHOUT PAY

SECTION 14.1 AN EMPLOYEE SHALL BE GRANTED A LEAVE OF ABSENCE WITHOUT PAY FOR A PERIOD NOT TO EXCEED ONE (1) YEAR FOR ANY REASON DEEMED APPROPRIATE BY THE DEPARTMENT HEAD, APPROVED BY THE MAYOR AND BASED UPON HIS/HER RECOMMENDATION. SAID LEAVE, HOWEVER, SHALL NOT BE GRANTED TO ENGAGE IN OTHER EMPLOYMENT. EXCEPT IN THE CASE OF MILITARY SERVICE, NO LEAVE SHALL BE EXTENDED SO THAT THE TOTAL AMOUNT OF TIME EXCEEDS ONE (1) YEAR.

15. ARTICLE 15 - VACATIONS

Section 15.1 The vacation period shall begin on April 1 of a given year and end on March 31 of the following year. To be eligible for a vacation, an employee must have had earnings in at least half of the payroll periods in the twelve months prior to the April 1 in question. In the case of an employee with less than 12 months of continuous service, this requirement will be met if the employee has had earnings in at least half of the payroll periods since the commencement of his/her employment.

Section 15.2

A. The vacation to which an eligible employee is entitled shall be determined by his/her seniority as of April 1 of the vacation period in question in accordance with the following schedule. Effective July 1, 2018:

Seniority as of April 1	Vacation
1 month	1 day
2 months	1 additional day
3 months	1 additional day
4 months	1 additional day
5 months	1 additional day
6 Months	1 week
1 year or more	2 weeks
5 years or more	3 weeks
8 years	3 weeks and 1 day
11-12 years	3 weeks and 2 days
13-14 years	3 weeks and 3 days
15 years or more	4 weeks and 1 day
20 years or more	4 weeks and 2 days
25 years or more	5 weeks and 1 day

FOR EMPLOYEES WHO COMMENCE THEIR EMPLOYMENT WITH THE CITY AFTER RATIFICATION OF THIS AGREEMENT, THE FOLLOWING VACATION SCHEDULE SHALL APPLY:

SENIORITY AS OF APRIL 1	VACATION
6 MONTHS	1 WEEK
1 – 5 YEARS	2 WEEKS
5-15 YEARS	3 WEEKS
15-20 YEARS	4 WEEKS
20 + YEARS	5 WEEKS

B. To be eligible to take vacation, an employee must have completed 6 months of service. New employees who currently would have to wait for the completion of six (6) full months of service before utilizing any accruing vacation time will now be allowed to utilize one (1) accrued vacation day upon the completion of each month of service up to the first five (5) months.

Section 15.3 Employees whose continuous service as of April 1 is either (1) less than six months, (2) over six months but less than one year (3) over four years but less than five years, (4) over 14 but less than 15 years, shall receive an additional week's vacation on a prorated basis rounded off to the nearest full day. An employee whose seniority as of April 1 was four years and eight months will receive a paid vacation of two weeks plus 8/12 of a third week, (i.e. three days).

Section 15.4 One week's vacation shall consist of five working days off. One week's vacation pay shall equal a normal week's pay at the employee's regular straight time rate of pay. If a holiday falls within an employee's vacation, the employee shall receive an additional day off with pay.

Section 15.5 Insofar as practical, vacations shall be requested at least three (3) working days in advance of the time requested and granted at the time most desired by the employee.

An employee's written request for use of accrued vacation credits shall be answered in writing no later than three (3) working days after receipt. Where a request is denied, management will provide a written reason for the denial. In the event that more employees request the same vacation, personal or compensatory time off than can reasonably be spared for operating reasons, preference will be given on the basis of seniority. However, once an employee's time has been approved, there will be no "bumping" of that approved time by a more senior employee at a later date.

Section 15.6 If an employee has not had or scheduled his/her vacation prior to November 15 it shall be scheduled for him/her by the City for some time prior to the end of the vacation period. Vacations not taken by this March 31st date will be forfeited unless written permission to carry over said vacation into the next period is given by the Department Head with his/her sole discretion.

Section 15.7 Any employee, except a probationary employee, who is laid off, discharged, retired or separated from the service of the City, for any reason, after April 1 but prior to taking his/her vacation shall be compensated in cash for the unused vacation he/she has become entitled to on April 1. In the case of a death of such employee, such payment shall be made to his/her estate.

Section 15.8 Vacation time off will be taken in consecutive days unless some other arrangement is agreed upon by the employee and his/her Department Head.

Section 15.9 An employee may accumulate up to twenty days of vacation to be taken at some future time provided said accumulation is approved by the Department Head.

Section 15.10 Any employee who elects to work on his/her vacation day shall be either compensated for the vacation day and be compensated at time and one half for any hours worked on that day or be permitted to reschedule the vacation day and work the regular hours at straight time.

16. ARTICLE 16 - HOLIDAYS

SECTION 16.1

A. IT IS AGREED THAT EACH EMPLOYEE IN THE DEFINED BARGAINING UNIT SHALL RECEIVE THE FOLLOWING HOLIDAYS DURING THE COURSE OF THIS AGREEMENT:

NEW YEAR'S DAY
MARTIN LUTHER KING DAY
PRESIDENT'S DAY
MEMORIAL DAY
JUNETEENTH
INDEPENDENCE DAY
LABOR DAY
COLUMBUS DAY
VETERAN'S DAY
THANKSGIVING DAY
DAY AFTER THANKSGIVING DAY
CHRISTMAS DAY

17. ARTICLE 20.3 - NEW ARTICLE – DISCIPLINARY HEARING

ABSENT EXIGENT CIRCUMSTANCES, THE CITY WILL PROVIDE AN EMPLOYEE WITH A MINIMUM OF TWO (2) DAYS-NOTICE WHEN SCHEDULING A DISCIPLINARY HEARING.

18. ARTICLE 21 - NEW ARTICLE – DISCIPLINARY NOTICE

AN EMPLOYEE SHALL NOT BE DISCIPLINED FOR ACTS WHICH OCCURRED MORE THAN THIRTY (30) WORK DAYS PRIOR TO THE IMPOSITION OF DISCIPLINE PROVIDED THE CITY HAD KNOWLEDGE OF SUCH ACTS AND HAD COMPLETED ITS INVESTIGATION. THE UNION SHALL BE NOTIFIED IN THE EVENT THE CITY'S INVESTIGATION EXCEEDS THIRTY (30) DAYS OF ITS DISCOVERY OF SUCH ACTS.

19. ARTICLE 28 – QUITS

ANY EMPLOYEE WHO IS ABSENT FROM WORK FOR SEVEN (7) CONSECUTIVE WORK DAYS WITHOUT HAVING GIVEN PRIOR NOTIFICATION TO AND WITHOUT HAVING BEEN EXCUSED BY THE CITY SHALL BE CONSIDERED A QUIT.

20. ARTICLE 31 - LENGTH OF AGREEMENT

ARTICLE 31.2 THIS AGREEMENT SHALL BE EFFECTIVE AS OF THE 1ST DAY OF JANUARY 2021 AND SHALL REMAIN IN FULL FORCE AND EFFECT UNTIL THE 31ST OF DECEMBER 2025.

21. APPENDIX B: CHANGE TO TYPIST II

Currently inadvertently under Grade 4; to be moved under Grade 8 as that is the correct grade.

28

Local Law No. 2022
City of Syracuse

A LOCAL LAW OF THE CITY OF SYRACUSE TO AMEND THE ANNUAL BUDGET OF THE CITY OF SYRACUSE FOR THE FISCAL YEAR 2020/2021 TO REFLECT THE SALARY INCREASES IN A CONTRACT NEGOTIATED BETWEEN THE CITY OF SYRACUSE AND THE AMERICAN FEDERATION OF STATE, COUNTY AND MUNICIPAL EMPLOYEES (AFSCME), LOCAL 400

BE IT ENACTED, by the Common Council of the City of Syracuse, as follows:

Section 1. Pursuant to Ordinance No. _____ approving the negotiated contract between the American Federation Of State, County and Municipal Employees (AFSCME) Local 400 and the City of Syracuse, effective January 1, 2021 through December 31, 2025, which includes wage increases for employees covered by said contract and which increases are retroactively effective as of January 1, 2021, as set forth in the labor contract on file with the City Clerk, and subject to the approval of the Mayor who shall have the power and authority to change and increase the salary, compensation and benefits of those employees covered by the aforementioned contract, said salary, compensation and benefits shall be paid from the Treasury of the City of Syracuse in the fiscal year 2020/2021 notwithstanding the fact that any such salary, compensation and benefits shall previously have been fixed or provided for in the budgets of said City for such fiscal year 2020/2021, provided, however, that any such increases shall be within the total amount contained in the budgets for such fiscal year and within such additional amounts as may be legally available therefor. The change herein authorized shall be effective as of January 1, 2021.

Section 2. The annual budget of the City of Syracuse for the year 2020/2021 be and the same are hereby amended to reflect the increases and changes for employees covered by the aforementioned contract.

Section 3. Article 2-C, Section 25 of the General City Law, insofar as it restricts or is inconsistent with the provisions of Section 1 through 2 of this Local Law is hereby superseded.

Section 4. This local law shall take effect immediately.

28

OFFICE OF MANAGEMENT & BUDGET

CITY OF SYRACUSE, MAYOR BEN WALSH

Timothy M. Rudd
Director

Julie Castellitto
Assistant Director

March 29, 2022

Ms. Patricia McBride
City Clerk
231 City Hall
Syracuse, New York 13202

RE: Request for Legislation

Dear Ms. McBride,

On behalf of the Office of the Mayor, please prepare legislation to be introduced at the next Common Council meeting. Please prepare the following legislation: A local law to amend the City Budget for July 2020 – June 2021 to reflect wage increases that were awarded to the Local Union 400, American Federation of State, County and Municipal Employees (AFL-CIO).

Thank you for your assistance in this matter.

Sincerely,

M Rudd

Timothy M. Rudd
Director of Management and Budget

Office of Management
and Budget
233 E Washington St
Room 213
Syracuse, N.Y. 13202

Office 315 448-8252
Fax 315 448-8116

www.syrgov.net

18

OFFICE OF MANAGEMENT & BUDGET

CITY OF SYRACUSE, MAYOR BEN WALSH

Timothy M. Rudd
Director

Julie Castellitto
Assistant Director

TO: Mayor, Ben Walsh
FROM: Timothy M. Rudd, Director of Management and Budget
DATE: March 29, 2022
SUBJECT: Labor Agreement with Local Union 400, American Federation of State, County and Municipal Employees (AFL-CIO)

On behalf of the Office of the Mayor, I am requesting the City to enter into a labor agreement between the City of Syracuse and the Local 400. This five year labor agreement runs from January 1, 2021 through December 31, 2025 and provides the general wage increases listed below. The City and the Local 400 have signed a tentative agreement, which is attached.

Wages	
Effective 1/1/21	3%
Effective 1/1/22	3%
Effective 1/1/23	3%
Effective 1/1/24	3%
Effective 1/1/25	3%

Please indicate your concurrence by signing below and returning this memo to me so that I may forward a copy to the Common Council along with the legislation request for the next Common Council Meeting.

Thank you for your attention regarding this matter.

Mayor Ben Walsh
City of Syracuse, New York

3/30/2022
Date

Office of Management and Budget
233 E Washington St
Room 213
Syracuse, N.Y. 13202

Office 315 448-8252
Fax 315 448-8116

www.syrgov.net

Ordinance No. 2022

ORDINANCE AUTHORIZING AN AGREEMENT BETWEEN THE CITY OF SYRACUSE AND THE AMERICAN FEDERATION OF STATE, COUNTY AND MUNICIPAL EMPLOYEES (AFSCME) LOCAL 400 FOR A FIVE YEAR PERIOD FROM JANUARY 1, 2021 THROUGH DECEMBER 31, 2025

BE IT ORDAINED, that the tentative agreement between the City of Syracuse and the American Federation of State, County and Municipal Employees (AFSCME), Local 400 effective January 1, 2021 through December 31, 2025, which is on file with the City Clerk and before this Common Council at the time of the adoption of this ordinance be and the same is hereby in all respects ratified, confirmed and approved; and

BE IT FURTHER ORDAINED, that the Mayor of the City of Syracuse be and he hereby is authorized and directed to execute such agreement for and on behalf of the City of Syracuse in the manner provided by law; and

BE IT FURTHER ORDAINED, that said agreement shall contain such other and further provisions as may be deemed by the Corporation Counsel to be in the best interest of the City and as shall be approved by her as to legality, form and manner of execution.

29

OFFICE OF THE MAYOR

MAYOR BEN WALSH

March 28, 2022

Patricia McBride
City Clerk
231 City Hall
Syracuse, NY 13202

Ordinance and Local Law Request For A Labor Agreement With Local Union 400, American Federation of State, County and Municipal Employees (AFL-CIO)

Dear City Clerk McBride:

Please have legislation prepared for the next meeting of the Common Council to authorize a labor agreement between the City of Syracuse and Local 400. This five year labor agreement runs from January 1, 2021 through December 31, 2025 and provides for the general wage increases listed below. The City and Local 400 have a tentative agreement, which is attached.

Wages

Effective 1/1/21	3%
Effective 1/1/22	3%
Effective 1/1/23	3%
Effective 1/1/24	3%
Effective 1/1/25	3%

Additionally, please be advised a separate local law to amend the City Budget for July 2020 – July 2021 is needed to accommodate the proposed wage increases.

Regards,

Frank Caliva
Chief Administrative Officer

Office of the Mayor
233 E. Washington St.
201 City Hall
Syracuse, N.Y. 13202

Office 315 448 8005
Fax 315 448 8067

www.syrgov.net

cc: Tim Rudd, Budget Director

3.17.2022 CITY OF SYRACUSE TENTATIVE AGREEMENT WITH LOCAL 400

Copyright © City of Syracuse
3.17.2022

PRELIMINARY SUCCESSOR CONTRACT AGREEMENTS:

A. All references to he/him/she/her in the successor CBA shall be referred to as they/them/their.

B. For continuity purposes, all references to "Association" in the successor CBA shall be referred to "Union."

1. ARTICLE 2: RECOGNITION

2.1 EXCLUSIVE REPRESENTATION

The City recognizes the union as the sole and exclusive representative for the purpose of collective bargaining with respect to establishing wages, hours and other conditions of employment for the term of this Agreement for City employees in the following departments and bureaus:

Public Works	Police and Fire Garage
Water	Engineering
Parks	

including temporary and seasonal, but excluding clerical, supervisory and all other employees specifically excluded in the determination made by the Onondaga County Public Employment Relations Board in its decision dated July 22, 1968.

2. **ARTICLE 3.12 – INDEMNIFICATION & HOLD HARMLESS**[1]

The Union agrees to indemnify and hold harmless the City from any action, claim, loss or damage incurred as a result of implementation of fee deductions and from any and all legal actions which may occur as a result of the Union taking fee deductions from any of its members.

[1] Article 3.12 was previously titled, "Agency Shop." As "Agency Shop" no longer applies under the law, the Article Heading was changed to Indemnification & Hold Harmless.

3. ARTICLE 4: HOURS OF WORK

4.1 REGULAR HOURS

The regular hours of work each day with the exception of emergencies shall be consecutive, except for interruptions for lunch periods.

4.2 WORK WEEK

4.2.1 The normal work week shall consist of five (5) consecutive eight (8) hour days, Monday through Friday inclusive, except for employees in continuous or specialized operations. The normal work week for employees in continuous or specialized operations shall also be five (5) consecutive eight (8) hour days.

4.2.2 Employees engaged in continuous or specialized operations are defined as employees involved in those Operations which reasonably require staffing for more than eight (8) hours per day or five (5) days per week.

4.3 WORK SHIFT

4.3.1 Eight (8) consecutive hours of work, excluding lunch periods (except where such lunch periods are included as part of the work shift) shall constitute a work shift, except for employees in continuous or specialized operations. Employees not so engaged shall be scheduled to work on a regular work shift and shall have a regular starting and quitting time.

4.3.2 For purposes of this Agreement, a specialized operation shall also be defined as a work situation which requires because of the specific nature and manner of the work that must be performed, a work shift that must vary from day to day and where a set starting time or quitting time, or both, cannot be maintained.

4.3.3 The performance of work by an employee assigned to specialized operations in any work day which goes beyond normal eight (8) hour work shift shall be subject to the overtime provisions of this Agreement. If the performance of any such work by an employee is less than a regular eight (8) hour work shift, then the daily rate based on a normal eight (8) hour work shift will apply.

4.4 WORK DAY

Eight (8) consecutive hours of work within the twenty-four (24) hour period commencing from the start of the employee's regular work shift shall constitute the regular work day, except in emergency situations or specialized operations including the presently scheduled Friday morning downtown trash pickup.

4.4.1 Absent emergency situations and mandatory overtime that is required due to snow and ice removal services for inclement weather events, an employee shall not work greater than sixteen (16) hours in any 24-hour period.

4.5 WORK SCHEDULE

4.5.1 Work Schedules showing the Bureau or Division work shifts, the employees assigned to such shifts, workdays, and hours shall be posted on all Department or Bureau Bulletin Boards at all times.

4.5.2 Except for emergency conditions, work schedules shall not be changed without at least five (5) working days notice given by posting such change on the applicable Department or Bureau Bulletin Board.

4.7 TARDINESS/ABSENTEEISM

4.7.1 In the event an employee will be absent from or late in reporting for scheduled work, the employee must notify his immediate supervisor at least one (1) hour prior to the start of the employee's scheduled shift start as to the reason for his absence or lateness and his expected reporting time or his expected date of return. This notification must be given in accordance with applicable work rules. Where the employee is physically unable to return on the date he reported as his expected date of return, he shall notify his supervisor prior to that date and state what his new expected return date is.

4.7.2 Notwithstanding the foregoing, if any employee is absent from work without authorization or communication, either written or oral, with his department/bureau head for five (5) consecutive work days, such employee shall be deemed to have resigned from his position and shall be terminated from the employ of the City. This sub-section shall not apply where, because of serious accident or hospitalization or other reason(s), it is physically impossible for the employee to provide the required notice.

4.9 REST PERIODS

4.9.1 All employees' work schedules shall provide for a fifteen (15) minute rest period each one-half (1/2) work shift. The rest period shall be scheduled as close to the middle of each one-half (1/2) shift as is practicable depending upon the work situation.

4.9.2 Employees required to work two (2) hours or longer beyond their regular quitting time into the next shift, shall receive a fifteen (15) minute rest period before they start to work on the next shift. In addition, they shall be granted the regular rest period that occurs during the shift, if still working at the time that the rest period is given.

4. ARTICLE 5.5: REHIRE AFTER TERMINATION

If after an employee is rehired to a regular full-time position, within the unit, within six (6) months after a termination of their seniority, their former seniority will be restored minus a toll equal for the period of time they were not employed full-time within the unit, unless the reason for break in service was discharge with cause, which will result in no restoration of seniority to the employee.

5. ARTICLE 6.2.4: PROCEDURES

6.2.5a. Any employee selected in accordance with the procedure set forth above shall undergo a trial period of a minimum of thirty (30) work days of starting employment in their assigned department, but not to exceed ninety (90) work days of starting employment in their assigned department. If it is found that such employee does not meet the requirements or responsibilities of the position to which they have been selected during the trial period, then such employee shall be restored to his former position and the position will be filled from the original posting in accordance with Section 2.3.

6. ARTICLE 8.1 PROCEDURES

8.1 PROCEDURES

8.2.1 Within five (5) work days after the suspension or discharge of an employee covered by this Agreement, or sooner if practicable, the City will notify the disciplined employee, with copies to the department Union steward of the reasons for which the discipline was imposed, which shall indicate a description of the charges. Said notice shall likewise be sent by certified mail to the Union President at a designated address. Cost of such certified notices shall be shared equally between the City and the Union. Within five (5) work days of the receipt of such written notification, the employee shall, if he disagrees with the disciplinary action taken, have a right to appeal the disciplinary action by filing a written grievance with the City, through the Union, which shall be processed by the Union as a grievance at Step 2 of the grievance procedure and be handled through the arbitration step, if deemed necessary. The grievance filed shall include a statement setting forth the reasons for contesting the charges and/or any mitigating circumstances. The above procedure shall apply in lieu of Section 75 and 76 of the Civil Service Law for any employee who would otherwise be covered by those sections.

7. **ARTICLE 8.2.5**

8.2.5 Prior to an employee signing an admission of wrongdoing they will be advised of their rights to have a steward present. Failure to so advise will mean that the written signed admission of wrongdoing shall not be used as an exhibit in a later arbitration proceeding involving discipline imposed upon that employee. It is understood that this shall not apply to instances where the employee is required to submit a report about incidents or events relating to work duties.

8. ARTICLE 10: WAGES

Wage Increases of:

3.0% EFFECTIVE JANUARY 1, 2021;

3.0% EFFECTIVE JANUARY 1, 2022;

3.0% EFFECTIVE JANUARY 1, 2023;

3.0% EFFECTIVE JANUARY 1, 2024; and

3.0% EFFECTIVE JANUARY 1, 2025.

9. ARTICLE 10.2: LONGEVITY SERVICE PAY

10.2.1 Effective January 1, 2022, all employees covered by this Agreement shall receive longevity service pay after five (5) years of continuous service with the City pursuant to the following schedule:

Years of Service	Amount per Hour
5	$.50
10	$1.00
15	$1.25
20	$1.40
25	$1.45
30	$1.50
35	$1.55
40	$1.60
45	$1.65
50	$1.70

10.2.2 Eligibility for longevity service pay shall occur on the payroll period commencing closest to the employee's 5th, 10th, 15th, 20th, etc. anniversary date of employment and longevity service pay shall be paid as part of an employee's regular weekly earnings. Longevity pay, where applicable, shall be included in computing premium, holiday, vacation and other paid time off.

10. **ARTICLE 10.4.2**

Removal of entire article.

11. ARTICLE 10.8: TOOL ALLOWANCE

Amend first sentence of 10.8.1 to read:

All classifications of Mechanics who are required to furnish their own tools shall receive in a separate check an annual tool allowance of three hundred fifty dollars ($350.00).

12. **ARTICLE 10.10: WORK AND PROTECTIVE CLOTHING**

Add to (a) the following:

For safety shoes, employees shall receive an allowance of one hundred dollars ($100.00) every six (6) months.

Amend (b) to read:

All employees in the bargaining unit shall receive an annual clothing allowance of two- hundred and fifty dollars ($250.00) which shall be paid in a separate check on or before the first Friday of September.

13. ARTICLE II: OVERTIME

11.1.3 (a) Overtime work, other than emergency situations or foreseeable emergency situations as determined by the Department Head, their Designee, or the Mayor or the Mayor's designee, shall be voluntary. Overtime made necessary because of an emergency condition shall be required of the employee. Overtime work for snow and ice removal that is required due to foreseeable inclement weather events shall be mandatory and, to the extent possible, the City shall provide seventy-two (72) hours-notice to employees of the requirement to work this overtime. An employee who fails to work overtime for a foreseeable inclement weather event may be subject to disciplinary action and the City reserves the right to request medical documentation and/or other proof of the employee's inability to work the inclement weather event overtime.

Absent emergency situations and mandatory overtime that is required due to snow and ice removal services for inclement weather events, an employee who calls out on sick leave shall not be permitted to work overtime in the twenty-four hour period following the start of their scheduled work shift.

14. ARTICLE 11.1.3(b): COMPENSATORY TIME

11.1.3 (b) Any employee who has completed their contractual probationary period (12 months) shall have the option of electing compensatory time for overtime hours worked instead of overtime pay. Employees cannot elect to split an overtime opportunity worked between compensatory time and overtime pay unless the compensatory time is used to reach the maximum of forty (40) hours. An employee cannot utilize compensatory time during the pay period in which it is earned but may utilize it in the following pay period. Compensatory time off must be requested at least forty-eight (48) hours in advance of the time requested unless mutually agreed upon by the employee and the supervisor. The request may not be unreasonably denied, however, the operational needs of a department shall prevail. It is also agreed that compensatory time off must be taken in a minimum of four (4) hour increments unless the employee's bank is less than four hours.

15. ARTICLE 11.2 PREMIUM RATES OF PAY

11.2.2 - add the following:

Compensated holiday hours shall be deemed hours actually worked for all regularly scheduled work. In other words, a holiday falling on a regularly scheduled work day does not break the consecutive string of days.

Where an employee physically works a seventh consecutive day and a compensated holiday falls on a sixth day, such employee shall be entitled to seventh consecutive day's pay at the double time rate. In other words, a holiday which immediately follows five regularly scheduled work days shall not break such "consecutiveness" for purposes of computing sixth and seventh days premium rates of pay.

However, where a holiday falls on a seventh consecutive day, the employee must physically work on such day in order to receive seventh consecutive day double time rate of pay. Similarly, where a holiday precedes the employee's regularly scheduled work week, such employee must physically work on such holiday for it to constitute "consecutiveness" for purposes of computing seventh consecutive day premium pay.

16. ARTICLE 12 HOLIDAYS

12.1 DESIGNATED HOLIDAYS

The following days shall be recognized as paid holidays under this contract: New Year's Day, Martin Luther King's Birthday, Memorial Day, Juneteenth, Independence Day, Labor Day, Columbus Day, Veterans' Day, Thanksgiving Day, Day after Thanksgiving, and Christmas Day.

17. **ARTICLE 12.3 SPECIAL OBSERVANCES**

Elimination of entire Article.

18. ARTICLE 12.4: HOLIDAY PAY

12.2 ELIGIBILITY

12.2.1 To be eligible for this holiday pay, an employee must have worked their last full scheduled work day prior to and after the holiday. An employee will be deemed to qualify under this provision if:

(1) they were on any authorized paid leave;
(2) their unpaid absence was excused by the City;
(3) they were off the active payroll due to a layoff or a leave without pay which commenced seven (7) calendar days or less prior to the holiday observance.

12.2.2 SICK LEAVE BEFORE AND/OR AFTER HOLIDAY

To be eligible for this holiday pay, an employee who calls out sick the day before or the day after a scheduled holiday shall be required to provide a doctor's note for said call out by the next business day.

19. **ARTICLE 15: PAID LEAVES**

15.1.2 Each employee in this bargaining unit shall be granted four (4) consecutive work days off for each death in the employee's family defined as spouse, children, stepchildren, parents, stepparents sister, brother, grandparents, grandchildren, father/mother-in-law, and son/daughter-in-law. In the event of death of an employee's brother/sister-in-law, aunt/uncle or niece/nephew, the employee will be given, the day of the funeral off with pay provided such is a regularly scheduled work day and the employee actually attends the funeral.

20. 15.2 PERSONAL LEAVE

15.2.1 Commencing January 1, 2023 and the January 1 of each contract year thereafter, employees covered by this Agreement shall be permitted four (4) personal leave days each year, non-cumulative. The employee shall be give as much advance notice as possible to the City of their intention to take such a day off. Such notice should be given in writing by requesting employee by completing a small request form to be provided by the department. Such leave will not be denied merely because employee did not complete required form unless failure to do so was a result of malice or mere refusal to complete such form. It is understood that such notices shall be given no less than within one (1) hour of the start of the employee's scheduled shift preceding the day it is to be taken off. Such leave shall be granted without loss of pay and shall not be deducted from vacation accruals or another leave benefit.

21. ARTICLE 16: VACATIONS

16.1 VACATION SCHEDULE

16.1.1 The vacation to which an eligible employee is entitled shall be determined by his seniority as of April 1st of the vacation period in question, in accordance with the following schedule:

Seniority as of April 1	Vacation
6 months	1 week
1-4 years	2 weeks
5-9 years	3 weeks
10-14 years	3 weeks + 2 days
15-19 years	4 weeks
20+ years	5 weeks

16.1.2 Employees whose continuous service as of April 1st is either:

(1) less than 6 months;
(2) over 6 months but less than 1 year;
(3) over 4 years but less than 5 years; or
(4) over 14 years but less than 15 years shall receive an additional week's vacation on a pro-rated basis rounded off to the nearest full day.

Example: An employee whose seniority as of April 1st was four years and eight months will receive a paid vacation of two weeks plus 8/12ths of a third week (i.e., 3 days).

16.1.2 One (1) weeks' vacation shall consist of five (5) working days off. One (1) weeks' vacation pay shall equal forty (40) hours off. One (1) weeks' vacation pay shall equal forty (40) hours pay at the employee's regular straight-time rate of pay.

22. **ARTICLE 16.3: PAY IN ADVANCE**

Removal of entire Article.

23. ARTICLE 17.1 SICK LEAVE ACCRUAL

17.1.1 All employees hired on or after July 1, 1977, shall accrue one (1) day of sick leave for each month of service from their date of hire and they shall continue to accumulate sick leave on that basis for as long as they are in the service of the City. Sick leave shall be accrued by an employee for any month in which the employee has actual work hours totaling twenty-four (24) or more hours.

25. ARTICLE 17.4.4 OVERTIME IN 24 HOURS FOLLOWING SICK LEAVE

Absent emergency situations, an employee who calls out on sick leave shall not be permitted to work overtime in the twenty-four (24) hour period following the start of their scheduled work shift.

26. 17.6: Sick Leave Incentive Program (New Article)

17.6 Sick Leave Incentive Program

The year will be divided into twelve calendar months. A bargaining unit employee shall be entitled to the appropriate incentive based upon no sick leave taken during any month. Any bargaining unit member who does not take any sick leave during a calendar month shall be entitled to a one-time sick leave incentive payment of $100.00 per month for a total amount of $1,200.00 for no sick leave taken during any calendar year.

The term "days off" refers to any sickness or disability of any kind during the calendar year in question.

Applicable sick leave incentive payments will be made by the second weekly paycheck in month after the month in which no sick leave was taken.

27. ARTICLE 18: HOSPITALIZATION AND DENTAL PLAN

18.1.1A Effective January 1, 2024, members of the Bargaining Unit shall pay an additional $7.00 per month for individual coverage and an additional $12.00 for family coverage.[2]

Effective January 1, 2025, members of the Bargaining Unit shall pay an additional $7.00 per month for individual coverage and an additional $12.00 for family coverage.[3]

[2] Based on the $7.00/$12.00 increase effective January 1, 2024, the monthly rate for individual coverage will be $73.55 and the monthly rate for family coverage will be $127.50.
[3] Based on the $7.00/$12.00 increase effective January 1, 2025, the monthly rate for individual coverage will be $80.55 and the monthly rate for family coverage will be $139.50.

28. **ARTICLE 23: TERMINATION AND MODIFICATION**

New Contract Term Dates: 1.1.2021 – 12.31.2025.

29. **APPENDIX A: WAGE RATES**

Reclassify MEO II and Sewer Maintenance Operator II to Grade 14.

30. APPENDIX "B": AUTHORIZATION CARD

American Federation of State, County & Municipal Employees AFL-CIO Authorization for Payroll Deduction

By:_____

Last Name, First Name, Middle I (Please Print)

To: City of Syracuse

Effective _____, I hereby request and authorize you to deduct from my earnings each _____, the amount certified by AFSCME Local 400 Council 66 as current union dues and to make any adjustment of payment of union dues certified by the union thereafter. The amount deducted shall be paid to the treasurer of the Local Union. This authorization shall remain in effect as long I am employed in a title represented by the union or until such time as I give you a written order of revocation.

Employee's Signature:

Street Address/City/State:

31. APPENDIX G: ONE-TIME ESSENTIAL EMPLOYEE PAYMENT

The City agrees to pay a one-time essential employee payment based under the following criteria:

A. Those employees who are members of this Bargaining Unit and who have been continuously employed with the City[4] between March 17, 2020 and March 17, 2022, shall receive a one-time essential employee bonus of three-thousand dollars ($3,000.00); or

B. Those employees who were not members of this Bargaining Unit and not employed with the City on March 17, 2020, but who are currently members of this Bargaining Unit and have been continuously employed with the City for at least six (6) months as of March 17, 2022, shall receive a one-time essential employee bonus of one-thousand dollars ($1,000.00).

[4] Employees who terminated their employment with the City on or after March 17, 2020 but who thereafter became re-employed with the City, are not entitled to the three thousand dollar ($3,000.00) essential employee bonus.

32. APPENDIX G – MECHANICS' WAGES

During calendar year 2022, the parties agree to meet and discuss wages applicable to the bargaining unit members employed as Mechanics.

Ordinance No. 2022

ORDINANCE AUTHORIZING CONSOLIDATED SUBMISSION FOR 2022-2023 (YEAR 48) COMMUNITY PLANNING AND DEVELOPMENT PROGRAMS: COMMUNITY DEVELOPMENT BLOCK GRANT (CDBG); EMERGENCY SOLUTIONS GRANT (ESG); HOME INVESTMENT PARTNERSHIP GRANT (HOME); AND HOUSING OPPORTUNITIES FOR PERSONS WITH AIDS (HOPWA) GRANT

WHEREAS, the City of Syracuse is an eligible community to receive Community Development Block Grant funds; Emergency Solutions Grant funds; HOME Investment Partnership Grant funds; and Housing Opportunities for Persons with AIDS (HOPWA) Grant funds for 2022-2023 (Year 48) pursuant to the Housing and Community Development Act of 1974 (the "Act"); and

WHEREAS, the primary objective of said Act is to develop a viable urban community by providing decent housing and a suitable living environment and by expanding economic opportunities, principally for persons of low and moderate income; and

WHEREAS, under Title I of the Act and related regulations of the United States Department of Housing and Urban Development (42 U.S.C. 12701), it is required that the Community Development Program be approved by the local legislative body; and

WHEREAS, the Department of Neighborhood and Business Development (formerly known as the Department of Community Development) has held a public meeting on the Community Development Program in the Common Council Chambers, Third Floor of City Hall, Syracuse, New York 13202 on March 30, 2022 at 5:30 p.m.; and

WHEREAS, the Common Council of the City of Syracuse has held a public hearing on the Community Development Program in the Common Council Chambers, Third Floor of City Hall, Syracuse, New York 13202 on April 6, 2022 at 5:30 p.m.; NOW THEREFORE,

BE IT ORDAINED, that this Common Council hereby approves the 2022-2023 (Year 48) Consolidated Submission for Community Planning and Development Programs for the City of Syracuse as set forth in the proposed Third Year Action Plan Budget (Year 48) which is attached as Appendix "A" to this Ordinance; and

BE IT FURTHER ORDAINED, that this Common Council hereby requires that Common Council approval by ordinance by two-thirds vote of all the members of the Council shall be necessary for the access and use of any HUD-108 funds for loans for any economic development project and a copy of such ordinance shall be submitted with the application for use of such HUD-108 funds in addition to any other documentation required by the applicable HUD rules and regulations; and

BE IT FURTHER ORDAINED, that the Mayor of the City of Syracuse is hereby authorized to execute the certifications set forth in Section 91.225-Certifications which are on file with the City Clerk and before this Council; and

BE IT FURTHER ORDAINED, that the Mayor of the City of Syracuse be and he hereby is authorized to execute and file with the United States Department of Housing and Urban Development an application, a copy of which is on file with the City Clerk and before this Council, for the 2022-2023 (Year 48) Community Development Block Grant Program funds in an amount not to exceed $5,158,048 (est.); Emergency Solutions Grant Program funds in an amount not to exceed $431,664 (est.); HOME Investment Partnership Program funds in an amount not to exceed $1,476,482 (est.); and Housing Opportunities for Persons with AIDS (HOPWA) in an amount not to exceed $412,909 (est.).

YEAR 48 (MAY 1, 2022 – APRIL 30, 2023) PY48 DRAFT BUDGETS

COMMUNITY DEVELOPMENT BLOCK GRANT PY48 DRAFT BUDGET

Applicant	Program	Year 47 Final Allocation	Final Year 48 Allocation	% of Total
ARISE, Inc.	Housing Referral and Advocacy Program	$ 28,235	$ 28,235	0.5%
Blueprint 15	Blueprint Housing Trust Fund	n/a	$ 47,000	0.9%
Catholic Charities of Onondaga County	Staffing: Eviction Prevention + Relocation Assistance Program	$ 168,310	$ 168,310	3.3%
	Direct Financial Assistance for Relocation Program	$ 33,491	$ 33,042	0.6%
CenterState CEO Foundation	Build Ready (Pathways to Apprenticeship) & Up Start for Syracuse Build	$ 30,579	$ 40,000	0.8%
CenterState CEO Foundation	Upstate Minority Economic Alliance	$ 8,900	$ -	0.0%
CNY Fair Housing	Education, Enforcement, + Tenant Counseling	$ 65,745	$ 80,000	1.6%
Dunbar Assocation, Inc.	Youth/Teen After School and Summer Program	$ 20,000	$ 20,000	0.4%
Empire Housing	Far Westside/City of Syracuse Revitalization Strategy	$ 81,000	$ 81,000	1.6%
Greater Syracuse Tenant Network	Tenant Advocacy in HUD Buildings	$ 40,409	$ 40,409	0.8%
Home HeadQuarters	Urgent Care Repair Program*	$ 1,369,413	$ 1,369,413	26.5%
	RAMP Partnership with ARISE	$ 50,000	$ 50,000	1.0%
	SHARP Program	$ 254,825	$ 254,825	4.9%
	Homeownership Services - Downpayment Assistance	$ 255,845	$ 255,845	5.0%
	Homeownership Center	$ 152,895	$ 152,895	3.0%
	Partnership with SMNC	$ 48,000	$ -	0.0%
Hopeprint, Inc.	Microneighborhood Reinvestment Strategy	n/a	$ 22,000	0.4%
Huntington Family Centers, Inc.	Youth Services Program	$ 34,428	$ 34,428	0.7%
InterFaith Works of CNY	Center for New Amercians + Tenant Counseling/Housing Stability	$ 63,626	$ 63,626	1.2%
Jubilee Homes	Workforce & SW Neighborhood Economic Development	$ 170,414	$ 187,914	3.6%
Northeast Hawley Development Association (NEHDA)	Neighborhood Revitalization and Stabilization Program	$ 73,883	$ 73,883	1.4%
	Fiscal Sponsor for Northside Learning Center	$ 10,000	$ -	0.0%
OnPoint For College	Career Services Program	$ 12,267	$ 12,267	0.2%
RISE	Refugee Immigrant Self-Empowerment	$ 3,000	$ -	0.0%
Syracuse Model Neighborhood Facility, Inc.	Southwest Community Center (Focus on Youth, Seniors)	$ 401,332	$ 401,332	7.8%
Syracuse Northeast Community Center	Northeast Community Center (Focus on Youth, Seniors)	$ 310,118	$ 310,118	6.0%
Welch Terrace	Welch Terrace Housing	$ 10,243	$ 10,000	0.2%
Westcott Community Center	Community Center Programming (Focus on Youth, Seniors)	$ 104,925	$ 104,925	2.0%
YWCA	Girls, Inc.	$ 15,000	$ 15,000	0.3%
	Women's Residence Program	$ 15,365	$ 15,365	0.3%
NBD Distressed Property	*Vacant Property Remediation (e.g. renovation, demolition); Program Income Included*	$ 319,582	$ 217,198	4.2%
City of Syracuse NBD (20% Cap)	*NBD Administration*	$ 1,019,018	$ 1,019,018	19.8%
Common Council Consideration	*Budget Adjustment*		$ 50,000	1.0%
GRAND TOTAL: PROPOSED ALLOCATION -->		**$ 5,170,848**	**$ 5,158,048**	**100.0%**

EMERGENCY SOLUTIONS GRANT PY48 DRAFT BUDGET

Agency	Program	ESG Category	Year 47 Allocated	Year 48 Draft Allocation	% of Allocation
Catholic Charities	Housing Stability Program	Homeless Prevention	$ 45,540.66	$ -	0.0%
Catholic Charities	Housing Diversion	Homeless Prevention	$ -	$ 50,000.00	11.6%
Catholic Charities	Homeless Outreach & Intake	Homeless Prevention	$ -	$ -	0.0%
Chadwick Residence	Transitional Housing	Transitional Housing	$ 15,525.65	$ 15,500.00	3.6%
Hiscock Legal Aid Society	Homeless Prevention Legal Services	Homeless Prevention	$ 76,836.37	$ 76,000.00	17.6%
In My Father's Kitchen	Under the Bridge Street Outreach	Street Outreach	$ 60,864.77	$ 60,000.00	13.9%
Interfaith Works	Housing Stabilization/Case Management	Homeless Prevention	$ 26,331.57	$ 26,331.00	6.1%
Liberty Resources Inc.	DePalmer House	Transitional	$ 15,108.28	$ 15,000.00	3.5%
Rescue Mission	HIS Team	Street Outreach	$ 30,648.22	$ 30,000.00	6.9%
The Salvation Army	TAPC	Rapid Rehousing	$ 18,900.00	$ 17,973.00	4.2%
The Salvation Army	Barnabas Case Management	Rapid Rehousing	$ 15,000.00	$ 14,000.00	3.2%
The Salvation Army	HALE	Rapid Rehousing	$ 37,986.52	$ 37,986.00	8.8%
Volunteer Lawyers Project	Eviction Defense Program	Homeless Prevention	$ 56,548.12	$ 56,500.00	13.1%
NBD	NBD Administration	Administration	$ 32,373.84	$ 32,374.00	7.5%
Total Expected			$ 431,664.00	$ 431,664.00	100.0%

HOME PARTNERSHIP PROGRAM PY48 DRAFT BUDGET

Funded Activities for HOME Program Year 48	Year 48 Draft Budget	% of Allocation
Total CHDO Operating Assistance (5% Max.)‡	**$ 70,813**	5.0%
Certified Community Housing Development Organizations - CHDO Operating Assistance		
Covenant Housing	*$ 15,000*	1.1%
Jubilee Homes of Syracuse, Inc.	*$ 41,040*	2.9%
Hopeprint	*$ 15,000*	1.1%
CHDO Generated Activities - (15% Min.)‡	**$ 212,438**	15.0%
CHDO-Eligible Construction Activities	*$ 212,438*	
Developer Subsidies and Direct Homebuyer Assistance	**$ 991,380**	70.0%
HOME Administration - (10% Max.)‡	**$ 141,625**	10.0%
TOTAL HOME INVESTMENT PARTNERSHIP FUND ALLOCATION FROM HUD	**$ 1,416,256**	100.0%
‡Mandated by HOME regulations		
Estimated Program Income Program Year 48 (If received, will be allocated to developer subsidies.)	$ 60,226	
Total PY 48 Allocation (Including Program Income)	**$ 1,476,482**	

30 ~~28~~ ~~23~~ 43

DEPARTMENT OF NEIGHBORHOOD & BUSINESS DEVELOPMENT

CITY OF SYRACUSE, MAYOR BEN WALSH

Commissioner
Michael Collins

Deputy Commissioner of Neighborhood Development
Michelle Sczpanski

Deputy Commissioner of Business Development
Eric Ennis

March 10, 2022

Ms. Patricia McBride
City Clerk
Room 231, City Hall
Syracuse, NY 13202

Re: Legislation Request – City of Syracuse's Third Annual Action Plan (2022-2023) with Draft Budget for new CDBG allocation (Year 48)

Dear Clerk McBride:

Please prepare legislation for the upcoming Common Council meeting on behalf of the Department of Neighborhood and Business Development approving the draft City of Syracuse Third Year Action Plan (2022-2023) with Budget (Program Year 48). The Action Plan is both a plan and an application to the U.S. Department of Housing and Urban Development containing allocations for four separate block grants conditioned on the receipt of the following expected amounts:

Community Development Block Grant (CDBG): $5,158,048
HOME Investment Partnership (HOME): $1,476,482
Emergency Solutions Grant (ESG): $431,664
Housing Opportunities for Persons with AIDS (HOPWA): $412,909

Attached please find budgets for the three primary block grants that depict the draft budget allocation that reflects the actual expected award. The department will hold their annual public comment meeting on the Action Plan at 5:30 on March 30, 2022. We request that the Council hold their public meeting on April 6.

I am happy to answer any questions at x8109 or via email at mcollins@syrgov.net.

Sincerely,

Michael Collins
Commissioner

Cc: Sharon Owens, Deputy Mayor
Michelle Sczpanski, Deputy Commissioner of Neighborhoods

Department of Neighborhood & Business Development
201 E Washington Street
Suite 600
Syracuse, NY 13202

Office 315 448 8100
Fax 315 448 8036

www.syrgov.net

GROWTH. DIVERSITY. OPPORTUNITY FOR ALL.

27

Ordinance No. 2022

ORDINANCE AUTHORIZING THE APPROPRIATION OF $257,000 OF THE AMERICAN RESCUE PLAN ACT OF 2021 (ARPA) FUNDS RECEIVED BY THE CITY OF SYRACUSE TO BE USED TOWARDS COSTS ASSOCIATED WITH MOBILE CRISIS RESPONSE SERVICES IN THE CITY OF SYRACUSE AND AUTHORIZE THE CITY OF SYRACUSE TO ENTER INTO AN AGREEMENT WITH LIBERTY RESOURCES WITHOUT ADVERTISING OR COMPETITIVE BIDDING TO PROVIDE MOBILE CRISIS RESPONSE SERVICES ON BEHALF OF THE SYRACUSE POLICE DEPARTMENT

BE IT ORDAINED, that this Common Council hereby appropriates the sum of $257,000 of the American Rescue Plan Act of 2021 (ARPA) funds received by the City of Syracuse to an account to be determined by the Commissioner of Finance; said funds are to be used for costs associated with Mobile Crisis Response Services in the City of Syracuse. The funds will be used to cover $7,000 of the cost of the salary and fringe of the position of City of Syracuse Emergency Solutions Grant administrator for Project Management; and the remaining $250,000 will be disbursed to Liberty Resources, the City's non-profit partner for Mobile Crisis Response Services, to be used to provide support to the Syracuse Police Department by providing assistance to persons in crisis exhibiting mental health and/or substance abuse related behavior that could bring harm to themselves or others, in the manner provided by law; and

BE IT FURTHER ORDAINED, that the Mayor has waived the Request for Proposal Process to enter into an Agreement with Liberty Resources, Inc, to provide Mobile Crisis Services on behalf of the Syracuse Police Department at a cost not to exceed the $250,000 in ARPA funds allocated for this Project; and

BE IT FURTHER ORDAINED, that the term for the agreement authorized herein shall be from the date of execution through June 30, 2023; and

BE IT FURTHER ORDAINED, that the agreement shall be subject to the approval of the Corporation Counsel as to terms, form and execution; and

BE IT FURTHER ORDAINED, that upon execution of the aforementioned agreement, the ARPA funds will be expended, subject to the approval of the Commissioner of Finance.

DEPARTMENT OF NEIGHBORHOOD & BUSINESS DEVELOPMENT

CITY OF SYRACUSE, MAYOR BEN WALSH

Commissioner
Michael Collins

Deputy Commissioner of Neighborhood Development
Michelle Sczpanski

Deputy Commissioner of Business Development
Eric Ennis

March 11, 2022

Ms. Patricia McBride
City Clerk
Room 231 City Hall
Syracuse, New York 13202

Re: Request for Legislation to appropriate $257,000 of American Rescue Plan Act (ARPA) funds to provide Mobile Crisis Response Services in the City of Syracuse.

Dear Ms. McBride:

Please prepare legislation for the March 28, 2022 meeting of the Common Council to appropriate $257,000 of the American Rescue Plan Act (ARPA) fund to provide Mobile Crisis Response Services in the City of Syracuse. A portion of the funding will support the City of Syracuse Emergency Solutions Grant Administrator ($7k – salary and fringe) for project management.

Two hundred fifty thousand dollars ($250,000) will be contracted to Liberty Resources, Inc., the City's non-profit partner providing the direct service. Liberty Resources, Inc. provides Mobile Crisis Response Services to persons in crisis (PIC) exhibiting mental health and/or substance abuse related behavior that could bring harm to themselves or others.

During New York State's Police Reform and Reinvention efforts, the City of Syracuse and Onondaga County convened a committee to address "Alternatives to Policing". One identified option was Diversionary Response, an approach that deploys mental health professionals to the scene of an incident resulting from a call to and dispatch of law enforcement from a 911 center.

Liberty Resources in collaboration with the Syracuse Police Department began to deploy this service specifically as it relates to 911 dispatched calls to the department in 2021. In instances where SPD has determined a person to be in a mental health and/or substance abuse induced crisis and confirmed there are no weapons or imminent danger; they create opportunity for Liberty Resources staff to intervene and provide services to the individual. We have found this approach to be effective for all parties involved but especially the person in crisis. It has reduced the potential for arrests during these incidences; while ensuring the needs of individuals are addressed by trained mental health professionals.

Department of Neighborhood & Business Development
201 E Washington Street
Suite 600
Syracuse, NY 13202

Office 315 448 8100
Fax 315 448 8036

www.syrgov.net

Authorization is also requested to waive the RFP process without advertising and competitive bidding and procurement. Upon approval, the city will execute an agreement with Liberty Resources, Inc. for use of ARPA funds to implement the project for an amount not to exceed $250,000 from the date of execution of the contract until 6/30/23 and will be charged American Rescue Plan Act (ARPA) funds. Liberty Resources would utilize 10% of the award to cover administrative costs.

Funds will be placed in an account to be designated by the Commissioner of Finance.

If you have any questions or need any additional information, please contact me at your convenience at mcollins@syrgov.net or (315) 448-8109.

Sincerely,

Michael Collins
Commissioner

Cc: Sharon Owens, Deputy Mayor

OFFICE OF MANAGEMENT & BUDGET

CITY OF SYRACUSE, MAYOR BEN WALSH

Timothy M. Rudd
Director

Julie Castellitto
Assistant Director

TO: Mayor Ben Walsh
FROM: Timothy M. Rudd, Director of Management and Budget
DATE: March 14, 2022
SUBJECT: Appropriation of Funds, Waive RFP Process & Enter An Agreement – Mobile Crisis Response Services

On behalf of the Department of Neighborhood & Business Development, I am requesting to appropriate funds in an amount not to exceed $257,000 from the American Rescue Plan Act (ARPA), to waive the RFP process and to enter an agreement with Liberty Resources, Inc. to provide Mobile Crisis Response Services in the City of Syracuse. A portion of the funding will support the City of Syracuse Emergency Solutions Grant Administrator ($7,000 – salary and fringe) for project management.

Two hundred fifty thousand dollars ($250,000) will be contracted to Liberty Resources, Inc., the City's non-profit partner providing the direct service. Liberty Resources, Inc. provides Mobile Crisis Response Services to persons in crisis (PIC) exhibiting mental health and/or substance abuse related behavior that could bring harm to themselves or others.

During New York State's Police Reform and Reinvention efforts, the City of Syracuse and Onondaga County convened a committee to address "Alternatives to Policing". One identified option was Diversionary Response, an approach that deploys mental health professionals to the scene of an incident resulting from a call to and dispatch of law enforcement from a 911 center.

Liberty Resources in collaboration with the Syracuse Police Department began to deploy this service specifically as it relates to 911 dispatched calls to the department in 2021. In instances where SPD has determined a person to be in a mental health and/or substance abuse induced crisis and confirmed there are not weapons or imminent danger; they create opportunity for Liberty Resources staff to intervene and provide services to the individual. They have found this approach to be effective for all parties involved but especially the person in crisis. It has reduced the potential for arrests during these incidences; while ensuring the needs of individuals are addressed by trained mental health professionals.

Authorization is also requested to waive the RFP process without advertising and competitive bidding and procurement. Upon approval, the City will execute an agreement with Liberty Resources, Inc. for use of ARPA funds to implement the project for an amount not to exceed $250,000 from the date of execution of the contract until 6/30/23 and will be charged American Rescue Plan Act (ARPA) funds. Funds will be placed in an account to be designated by the Commissioner of Finance.

Office of Management and Budget
233 E Washington St
Room 213
Syracuse, N.Y. 13202

Office 315 448-8252
Fax 315 448-8116

www.syrgov.net

Please indicate your concurrence by signing below and returning this memo to me so that I may then forward your approval to the Common Council along with the request for authorizing this legislation.

Thank you for your attention regarding this matter.

Mayor Ben Walsh
City of Syracuse, New York

Date 3/16/22

Ordinance No. 2022

ORDINANCE AUTHORIZING ACCEPTANCE BY THE CITY OF SYRACUSE OF AN AMOUNT NOT TO EXCEED $6,500.00 FROM SYRACUSE UNIVERSITY AS REIMBURSEMENT FOR THE OVERTIME COSTS INCURRED BY THE SYRACUSE FIRE DEPARTMENT TO PROVIDE A HAZARDOUS MATERIALS TEAM FOR THE MONSTER JAM, MONSTER TRUCK SHOW SCHEDULED TO BE HELD AT THE CARRIER DOME ON APRIL 16, 2022

BE IT ORDAINED, that this Common Council hereby authorizes the acceptance of $6,500.00 from Syracuse University as reimbursement for the overtime costs incurred by the Syracuse Fire Department to provide a Hazardous Materials Team for the Monster Jam, Monster Truck Show that is scheduled to be held at the Carrier Dome on April 16, 2022; and the Commissioner of Finance is hereby authorized to deposit the funds received into Fire Department Account #01.415380 or another appropriate account as designated by the Commissioner of Finance.

SYRACUSE FIRE DEPARTMENT

CITY OF SYRACUSE, MAYOR BEN WALSH

Michael J. Monds
Chief of Fire

Daniel P. Downes
First Deputy Chief

Richard Kisselstein
Executive Deputy Chief

Deputy Chiefs
Elton Davis
John Kane
James Farewell
Zachary Smith
Leonard Danielewicz

March 17, 2022

Patricia K. McBride
City Clerk
230 City Hall
Syracuse, NY 13202

Re: Request for Legislation

Dear Ms. McBride:

Please prepare legislation to be introduced at the next meeting of the Common Council to authorize the Syracuse Fire Department to accept money from Syracuse University.

Syracuse University has requested that the Department of Fire provide a hazardous materials team to monitor the atmosphere inside the Carrier Dome during the upcoming Monster Truck Show, which is scheduled for April 16th.

Syracuse University has offered to reimburse the Department for the cost of overtime required to provide this hazardous materials team. The reimbursement shall not exceed $6,500.

Funds will be deposited into account 01.415380 or as determined by the Commissioner of Finance.

Thank you for your consideration.

Respectfully submitted,

Michael J. Monds

Michael J. Monds
Chief of Fire

Chief's Office
Syracuse Fire Dept.
Public Safety Building
511 S. State St.
6th Floor, Rm. 607
Syracuse, N.Y. 13202

Office 315 473 5525
Fax 315 422 7766

www.syrgov.net

Ordinance No. 2022

ORDINANCE AMENDING ORDINANCE NO. 424-2021 AUTHORIZING CONTRACT WITH MOHAWK VALLEY INFORMATION TECHNOLOGIES, INC. RELATIVE TO PROVIDING INFORMATION TECHNOLOGY SERVICES FOR THE SYRACUSE POLICE DEPARTMENT'S PUBLIC WEBSITE

BE IT ORDAINED, that Ordinance No. 424-2021 is hereby amended to read as follows:

WHEREAS, Section 5-205-A of the Charter of the City of Syracuse, as amended, provides the Mayor shall "award contracts for professional services subject to the approval of the Common Council"; and

WHEREAS, the Mayor has waived the Request for Proposal process and has approved the retention of Mohawk Valley Information Technologies, Inc., under the following terms:

(1) Mohawk Valley Information Technologies, Inc. shall provide all required information technology services required for the continued support, maintenance and development of the Syracuse Police Department's public website;

(2) The duration of the contract will be from July 1, 2021 through June 30, 2022;

(3) The City shall pay to Mohawk Valley Information Technologies, Inc. an amount not to exceed $4,000.00* for all services under this agreement; NOW, THEREFORE,

BE IT ORDAINED, that the Mayor, on behalf of the City of Syracuse, be and he hereby is authorized to execute such amended contract, as hereinabove stated, subject to the approval of the Corporation Counsel as to terms, form and execution; and

BE IT FURTHER ORDAINED, that all costs associated with this amended agreement shall be charged to Account #541500.01.31230 or another appropriate account as designated by the Commissioner of Finance.

_____ = new material

* previously read $2,500.00

1st Deputy Chief
Joseph Cecile

Deputy Chiefs
Derek McGork
Richard Shoff, Jr.
Richard H. Trudell

SYRACUSE POLICE DEPARTMENT
Kenton T. Buckner, Chief

March 25, 2022

Patricia McBride
City Clerk
231 City Hall
Syracuse, New York 13202

RE: Amend Ordinance 424-2021 to increase the amount of the waiver from $2,500 to $4,000

Dear Ms. McBride,

On behalf of the Department of Police, please prepare legislation for the next regularly scheduled meeting of the Syracuse Common Council to amend Ordinance 424-2021 which allowed the Syracuse Police Department to enter into an agreement with Mohawk Valley Information Technologies, Inc. (MVINTECH), an Information Technology Solutions provider. MVINTECH maintains the Police's Department's public website and additional updates have been needed throughout the fiscal year as the Department continues to provide additional and more timely information to the public. The agreement is effective for one year from July 1, 2021- June 30, 2022.

Mohawk Valley Information Technologies, Inc. (MVINTECH) was involved in the initial development and set-up of the Department's public website in 2009 and has also been the technology professional service provider of Department's website since 2009. For Security purposes and best practice in maintaining the integrity and compliance with CJIS Federal Regulations, the website is hosted outside of the Department's main computer Network by M.A. Polce Inc., to which MVINTECH has a Value-Added Partnership with.

Expenditures under this waiver not to exceed $ 4,000 will be charged to account # 541500.01.31230 during the 2021/22 budget year as applicable.

Sincerely,

Joseph Cecile
1st Deputy Chief of Police

OFFICE OF MANAGEMENT & BUDGET

CITY OF SYRACUSE, MAYOR BEN WALSH

Timothy M. Rudd
Director

Julie Castellitto
Assistant Director

TO: Honorable Mayor Ben Walsh
FROM: Timothy M. Rudd, Director of Management & Budget
DATE: March 25, 2022
SUBJECT: Amend Ordinance #424-2021 – Mohawk Valley Information Technologies, Inc. (MVINTECH)

On behalf of the Department of the Police, I am requesting that the City of Syracuse amend ordinance #424-2021 which allowed the Syracuse Police Department to enter into an agreement with Mohawk Valley Information Technologies, Inc. (MVINTECH), an Information Technology Solutions provider. MVINTECH maintains the Police Department's public website and additional updates have been needed through the fiscal year as the Department continues to provide additional and more timely information to the public. The agreement is effective for one year from July 1, 2021 – June 30, 2022.

Mohawk Valley Information Technologies, Inc. (MVINTECH) was involved in the initial development and set-up of the Department's public website in 2009 and has also been the technology professional service provider of the Department's website since 2009. For security purposes and best practice in maintaining the integrity and compliance with CJIS Federal Regulations, the website is hosted outside of the Department's main computer network by M.A. Polce Inc., to which MVINTECH has a value-added partnership with.

Expenditures under this waiver are not to exceed $4,000 and will be charged to account number #541500.01.31230 during the 2021/22 budget year as applicable.

Please indicate your concurrence by signing below and returning this memo to me so that I may then forward your approval to the Common Council along with the request for authorizing this legislation.

Thank you for your attention regarding this matter.

Mayor Ben Walsh
City of Syracuse, New York

3/30/2022
Date

Office of Management and Budget
233 E Washington St
Room 213
Syracuse, N.Y. 13202

Office 315 448-8252
Fax 315 448-8116

www.syrgov.net

Ordinance No. 2022

ORDINANCE AUTHORIZING THE CITY OF SYRACUSE TO APPLY FOR A GRANT IN AN AMOUNT NOT TO EXCEED $30,000 FROM THE NEW YORK STATE DEPARTMENT OF PARKS, RECREATION AND HISTORIC PRESERVATION THROUGH THEIR CERTIFIED LOCAL GOVERNMENT PROGRAM AND EXECUTE A CONTRACT OR WRITTEN INSTRUMENTS ASSOCIATED WITH THE GRANT AS NECESSARY INCLUDING AN AGREEMENT WITH THE LANDMARK SOCIETY OF WESTERN NEW YORK TO ADMINISTER THE GRANT FUNDS AND PRESENT THE 2022 NEW YORK STATEWIDE PRESERVATION CONFERENCE IN THE FALL OF 2022

BE IT ORDAINED, that the Mayor be and he hereby is authorized to submit an application to the New York State Department of Parks, Recreation and Historic Preservation through their Certified Local Government Program for a grant in an amount not to exceed $30,000.00; if awarded the grant funds will be used by the City of Syracuse to cover conference scholarships, venue costs, audio/visual expenses, and keynote speaker costs associated with the 2022 New York Statewide Preservation Conference presented by the Landmark Society of Western New York in partnership with the Preservation League of New York State and the New York State Department of Park, Recreation and Historic Preservation that is scheduled to be held in Syracuse, New York in the Fall of 2022 for individuals involved in preservation, historic sites, and grassroots community revitalization; no local match is required; and

BE IT FURTHER ORDAINED, that upon receipt of said grant, the Mayor be and he hereby is authorized to execute a contract or written instruments associated with the grant as approved by the Corporation Counsel, including but not limited to a contract with the Landmark Society of

Western New York to administer the grant funds and present the 2022 New York Statewide Preservation Conference; and

BE IT FURTHER ORDAINED, that upon receipt of any funds pursuant to said application authorized herein, the Commissioner of Finance is authorized and directed to deposit the same in an appropriate account to be determined by him.

DIVISION OF CITY PLANNING

CITY OF SYRACUSE, MAYOR BEN WALSH

Owen Kerney
Assistant Director

March 23, 2022

Patricia McBride, City Clerk
City Hall, Room 231
Syracuse, NY 13202

RE: REQUEST FOR LEGISLATION

Dear Ms. McBride:

Please prepare legislation for the April 11, 2022, meeting of the Common Council authorizing the City to apply for a grant and enter into an agreement with the New York State Department of Parks, Recreation & Historic Preservation–Certified Local Government Program in an amount not to exceed $30,000.

The grant is in support of the 2022 New York Statewide Preservation Conference to be held for the first time in Syracuse in Fall 2022. The statewide conference is the only event of its kind in the state and is a 3-day gathering for anyone involved in preservation, historic sites, and grassroots community revitalization. The conference is presented by the Landmark Society of Western NY in partnership with the Preservation League of NYS and the NYS Office of Parks Recreation and Historic Preservation. The CLG grant will fund conference scholarships, venue costs, audio/visual expenses and keynote speaker fees.

No match is required for this grant. Upon award, the City will contract with the Landmark Society of WNY to administer the funds and present the conference. If you have any questions, please contact Kate Auwaerter at 448-8108 or kauwaerter@syrgov.net.

Sincerely,

Owen Kerney
Assistant Director

Division of City Planning
201 E. Washington St.
City Hall Commons,
Room 512
Syracuse, N.Y. 13202

Office 315 448 8160

www.syrgov.net

Ordinance No. 2022

ORDINANCE GRANTING PERMISSION TO ADDIS BUILDING, LLC OWNER OF THE PROPERTY AT 449-453 SOUTH SALINA STREET, SYRACUSE NEW YORK TO ENCROACH 9.5' INTO THE SOUTH SALINA STREET RIGHT-OF-WAY WITH A BLADE SIGN

WHEREAS, Addis Building, LLC, owner of the property situated at 449-453 South Salina Street, Syracuse, New York, has requested permission to encroach 9.5' into the South Salina Street Right-of-Way with a blade sign; and

WHEREAS, the report of the Commissioner of the Department of Public Works is on file in the office of the City Clerk; NOW, THEREFORE,

BE IT ORDAINED, that this Common Council hereby grants permission to Joseph Gehm (hereinafter referred to as the "Owner") to maintain the aforementioned encroachment, subject to the following conditions:

1. The Owner shall defend, indemnify and save harmless the City of Syracuse, its officers and servants, from any and all liability and from any and all claims, damages, costs and expenses to person or property which may occur out of the usage of said street right-of-way heretofore described.

2. The Common Council may terminate this permission upon thirty (30) days notice to the Owner.

3. Said Owner shall, within thirty (30) days from the effective date of this ordinance, file in the office of the City Clerk a duly acknowledged written acceptance of this permission and consent to its terms and conditions. Said acceptance, when so filed, shall constitute an agreement on the part of the Owners to do and conform to all conditions thereof.

4. Said Owner shall obtain the necessary permits, in addition to this permission ordinance, for the blade sign.

5. Said Owner agrees and consents that the City will not be liable for any damage to the blade sign from any cause, including but not limited to snow removal, utility repair and replacement, and sidewalk repairs.

6. Said Owner agrees and consents to maintain compliance with the requirements of the various City Departments attached hereto as Appendix "A".

Department of Neighborhood & Business Development
Central Permit Office
Ben Walsh, Mayor

Encroach (Minor) Plan Review Comments for Applicant
(Revised 07/15)

Location of Proposed Work: 449-53 Salina St S

Permit #: PC-0106-22

Permit Type: Encroach (Minor)

Date: 03/16/2022

Contact: Addis Building, LLC

Phone #: 315-447-5172

The departments below have reviewed your application and provided the following comments.
Approval is subject to the conditions listed below.

Approval	Status Date	Status	Reviewer	Comments
DPW - Commissioner	03/09/2022	Conditionally Approved	Martin Davis	Minor encroachment ok. Structure & connection must meet the City Engineer's approval. Applicant must indemnify the City per Corporation Counsels approval
DPW - Sanitation & Sewers	03/09/2022	Conditionally Approved	Vinny Esposito	No sewer or drainage issues. Hight must be approved by City Engineer.
DPW - Sidewalk Inspector	03/11/2022	Approved	Chris Ettinger	no concerns
DPW - Traffic Control	03/09/2022	Approved	Joe DiBello	
DPW - Transportation Planner	03/08/2022	Conditionally Approved	Neil Milcarek-Burke	No concern with signage encroachment as proposed.
Engineering - Design & Construction	03/09/2022	Internal Review Complete	John Kivlehan	Owner/applicant assumes responsibility for design of the sign, structural condition of the building and the structural integrity of the connection of the sign to the building. Owner shall inspect the sign on a regular basis to ensure it is structurally sound and does not present as a hazard to the public use of the City Right of Way
Engineering - Mapping	03/09/2022	Internal Review Complete	Ray Wills	Work should have no impact on Mapping Division assets.
Engineering - Sewers	03/09/2022	Internal Review Complete	John Kivlehan	No impact to sewers
Zoning Planner	03/16/2022	Approved	Lisa Welch	Per Sign Waiver AS-21-07
Engineering - City Engineer	03/11/2022	Conditionally Approved	Mary Robison	-Owner/applicant assumes responsibility for design of the sign, structural condition of the building and the structural integrity of the connection of the sign to the building. Owner shall inspect the sign on a regular basis to ensure it is structurally sound and does not present as a hazard to the public use of the City Right of Way. - The applicant shall indemnify the City from any and all liability for damages or injuries caused to, from or as a result of the approval of this encroachment.

Department of Public Works

ENCROACHMENT PERMIT ROUTING FORM

ADDRESS: 449-53 S Salina St

APPLICATION DATE: March 7, 2022

PROPERTY: 101.-08-05.0

PERMIT APPLICATION: PC-0106-22

OWNER: Addis Building LLC/Joseph Gehm

MINOR OR MAJOR ENCROACHMENT _____

CONTRACTOR:

PHONE: 315-447-5172

EMAIL: joe@lahinchgroup.com

DESCRIPTION OF WORK: Encroachment Waiver for sign encroaching 114' into City's ROW

TO:

ASSESSMENT	DPW	ENGINEERING	FIRE PREVENTION	LAW
NBD	PLANNING	POLICE	WATER	ZONING
DISTRICT COUNSILOR	CENTRO	NATIONAL GRID	VERIZON	

APPROVED/DENIED_____

REVIEWED BY_____ DATE_____

COMMENTS_____

This form is for the reviewing departments use only. Please do not return the Central Permit Office.

The applicant will receive the review comments that have been entered in IPS.

If you have any questions please call 315-448-47-15 or email centralpermitofficeoffice@syrgov.net.

Thank you

Encroachment Permit Instructions and Application

Jeremy Robinson
Commissioner

Martin E. Davis, L.S.
Deputy Commissioner

Ann Fordock
Deputy Commissioner

DEPARTMENT OF PUBLIC WORKS
Ben Walsh, Mayor

Encroachment Application and documents must be submitted to:
Central Permit Office
201 East Washington Street, Room 101
Syracuse, New York 13202, Phone # 315-448-4715
CentralPermitOffice@syrgov.net

SUBMITTAL REQUIREMENTS

Only complete applications will be accepted for review:

- [X] Pages 5 and 6 of the Encroachment Application completed in full and signed by the owner of the property adjacent to the right-of-way.
- [X] A copy of the stamped survey map* (**must be to scale**, not reduced) for the private property abutting the street right-of-way in question.
- [X] A stamped or signed site plan* (**must be to scale**, not reduced) showing specific location and distances from front of main building abutting right-of-way, front and side property lines, curbs, sidewalks, sidewalk widths, and driveways and improvement dimensions (lengths, widths, and heights) for all encroaching features. Also, for fencing, location of any gates and direction they will open. **The proposal can be drawn (to scale) on a copy of the property survey, but applicant must initial all changes made to the stamped survey and cross out the surveyor's stamp.**
- [X] Elevation drawing* or manufacturer's catalogue cut of any features of the improvement.

**If you submit full size architectural drawings or survey maps, you must also submit one additional copy no larger than 11" x 17" or an electronic copy.*

PLEASE FILL IN COMPLETELY

Address of Proposed Encroachment: 449-53 Salina St S
Street address abutting the right-of-way where the improvement is being requested

Section, Block & Lot # (if known) 101.-08-05.0

Property Owner (print name): Addis Building, LLC - Joseph Gehm

Mailing Address (if different): 100 Madison St, Ste 1905, Syracuse, NY 13202

Phone #(s): 315-447-6172

Email Address(es): joe@lahinchgroup.com

Encroachment Permit Instructions and Application

Applicant / Owner's Representative (print name): Corey Fishel - Allied Sign Company

Mailing Address: 720 Erie Blvd West, Syracuse, NY 13204

Phone #(s): 315-471-2771

Email Address: greg@alliedsigncompany.com

Type of Improvement requested: Permanent Blade Sign

Describe the style &/or materials of the improvement: Blade Sign with internally Illuminated channel letters

Ex: a picket fence; a masonry bench

List the dimensions of the improvement in feet and inches:

Horizontal: _____ Feet 108" Inches Vertical: _____ Feet 65" Inches

What is the reason(s) for the improvement? Blade sign is required due to structure of building / sign area

Specify any hardship or special circumstances, or public benefit to be gained, if applicable. Attach documentation or a letter of explanation if necessary.

Is this improvement part of a larger project? _____ Yes X No

If yes, please identify the project and specify the additional city/county approvals being applied for

How far does the feature encroach into the City's Right of Way? 114"

SIGNATURE OF THE OWNER

I (we) certify that I (we) own the private property listed above (i.e., the property abutting the requested improvement).

Signature(s): _____ 10/18/21 Date

_____ Date

blade sign

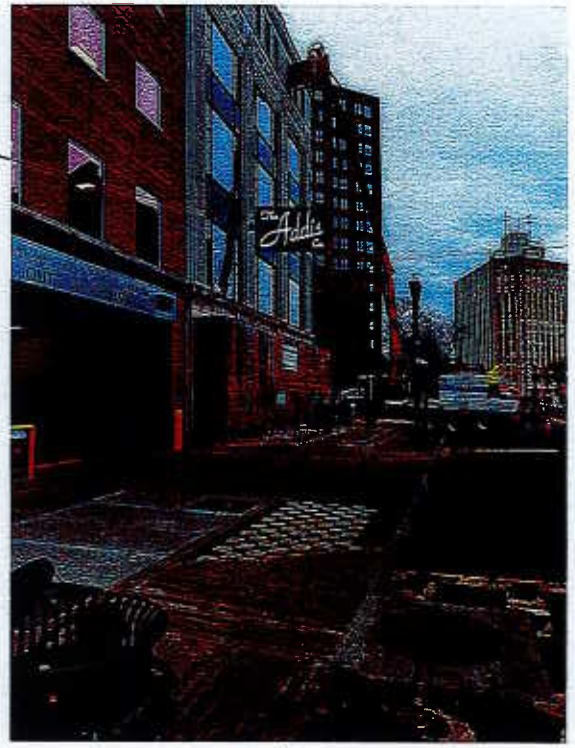

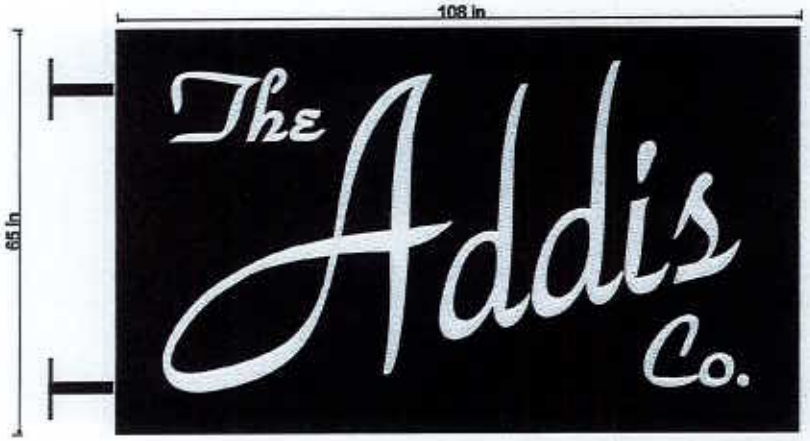

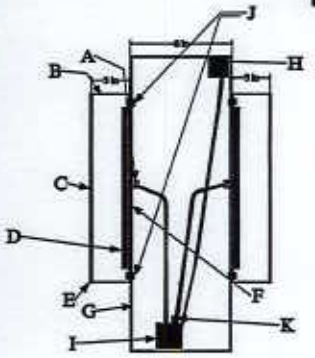

A: pass thru wiring assembly conduit kit
B: .063 aluminum return painted black
C: 3/16" white acrylic
D: white LEDs
E: 1" black trimcap
F: .063 white aluminum back
G: 8" deep black background pan
H: 120 v amp primary electric service (provided by others)
I: 12v LED power supply
J: 1/4" non corrosive fasteners
K: disconnect switch

ALLIED Sign COMPANY
SINCE 1950

720 Erie Blvd. west
Syracuse, NY 13204

P. 315.471.2771
F. 315.476.3756
alliedsigncompany.com

Client:	The Addis Co.	Date:	June 30, 2021
Address:	449 S. Salina St.	Approved By:	
City/State:	Syracuse, NY	Approval Date:	

This sign is intended to be installed in accordance with the requirements of Article 600 of the National Electrical Code and/or other applicable local codes. This includes proper grounding and bonding.

RECORD DESCRIPTION (SCHEDULE "A" IN REFERENCE #4)

ALL THAT TRACT OR PARCEL OF LAND, SITUATE IN WARD 09 OF THE CITY OF SYRACUSE, COUNTY OF ONONDAGA AND STATE OF NEW YORK BEING LOT # 26 BL. 116, AT 449-53 SOUTH SALINA STREET, APPROXIMATELY 56.87' X 145.5 LOT CONTAINING A BRICK BUILDING, PROPERTY NUMBER 097.99.05.001 DESIGNATED AS 116 MAP SECTION 101 BLOCK 09 LOT 05.0 (101.-09-05.0); BEING ALSO DESCRIBED AS:

ALL THAT TRACT OR PARCEL OF LAND, SITUATE IN THE CITY OF SYRACUSE, COUNTY OF ONONDAGA AND STATE OF NEW YORK, TAX MAP ID 101.-09-05.0, IN SAID CITY AND BEING MORE PARTICULARLY DESCRIBED AS FOLLOWS:

BEGINNING AT A POINT IN THE EASTERLY BOUNDARY OF SOUTH SALINA STREET, SAID POINT BEING N. 0° 03' 30" E. A DISTANCE OF 294.76 FEET, MEASURED ALONG SAID EASTERLY STREET BOUNDARY, FROM ITS INTERSECTION WITH THE NORTHWESTERLY BOUNDARY OF EAST ONONDAGA STREET; RUNNING THENCE N. 0° 03' 30" E. ALONG SAID EASTERLY STREET BOUNDARY, A DISTANCE OF 56.87 FEET TO A POINT; THENCE S. 89° 48' 10" E. A DISTANCE OF 133.90 FEET TO A POINT; THENCE S. 0° 03' 30" A DISTANCE OF 56.87 FEET TO A POINT; THENCE N. 89° 48' 210" W. A DISTANCE OF 133.90 FEET TO THE POINT AND PLACE OF BEGINNING.

BEING PART OF BLOCKS 116 AND 133 IN SAID CITY, SAID PREMISES BEING COMMONLY KNOWN AS 449-453 SOUTH SALINA STREET SYRACUSE, NEW YORK.

SURVEYOR'S DESCRIPTION

ALL THAT TRACT OR PARCEL OF LAND SITUATE IN THE CITY OF SYRACUSE, COUNTY OF ONONDAGA AND STATE OF NEW YORK BEING PART OF LOT NUMBER 26 AS SHOWN ON A MAP SHOWING THE PROPERTY LINES ON LOTS 23, 24, 25, 26 & 17 IN BLOCK No. 116 SYRACUSE N.Y. RECORDED IN THE ONONDAGA COUNTY CLERK'S OFFICE DECEMBER 9, 1908 AS FILED MAP NUMBER 1261 BEING MORE PARTICULARLY BOUNDED AND DESCRIBED AS FOLLOWS:

BEGINNING AT A POINT IN THE EAST LINE OF SOUTH SALINA STREET LOCATED N 00° 03' 30" E. A DISTANCE OF 294.76 FEET FROM THE INTERSECTION OF THE EAST LINE OF SOUTH SALINA STREET WITH THE NORTHWESTERLY LINE OF EAST ONONDAGA STREET

THENCE: N 00° 03' 30" E. ALONG THE EAST LINE OF SOUTH SALINA STREET, A DISTANCE OF 56.87 FEET TO A POINT IN THE EAST LINE OF SOUTH SALINA STREET

THENCE: S 89° 48' 10" E. A DISTANCE OF 133.90 FEET TO A POINT

THENCE: S 00° 03' 30" W. A DISTANCE OF 56.87 FEET TO A POINT

THENCE: N 89° 48' 10" W. A DISTANCE OF 133.90 FEET TO THE POINT AND PLACE OF BEGINNING

CONTAINING 7,614.9 SQUARE FEET OR 0.175 ACRES OF LAND, MORE OR LESS

SCHEDULE B

ITEM #8: TOGETHER WITH AND SUBJECT TO THE TERMS, CONDITIONS AND PROVISIONS TO A NON-EXCLUSIVE RIGHT OF INGRESS AND EGRESS EASEMENT WITH ONONDAGA GALLERIES LIMITED LIABILITY COMPANY AS DESCRIBED IN AN EASEMENT AGREEMENT DATED DECEMBER 2, 2016 AND RECORDED IN THE ONONDAGA COUNTY CLERK'S OFFICE ON DECEMBER 1.1, 2016 AS INSTRUMENT NUMBER 2016-00057694. EASEMENT IS NOT PLOTTABLE

ITEM #9: TOGETHER WITH AND SUBJECT TO THE TERMS, CONDITIONS AND PROVISIONS TO A NON-EXCLUSIVE RIGHT OF INGRESS AND EGRESS EASEMENT WITH 147 EAST ONONDAGA STREET CORP., AS DESCRIBED IN AN EASEMENT AGREEMENT DATED DECEMBER 2, 2016 AND RECORDED IN THE ONONDAGA COUNTY CLERK'S OFFICE ON DECEMBER 1.1, 2016 AS INSTRUMENT NUMBER 2016-00057695. EASEMENT IS NOT PLOTTABLE

ITEM #10: TOGETHER WITH AND SUBJECT TO THE TERMS, CONDITIONS AND PROVISIONS TO A NON-EXCLUSIVE RIGHT OF INGRESS AND EGRESS EASEMENT WITH ONONDAGA GALLERIES LIMITED LIABILITY COMPANY AS DESCRIBED IN AN EASEMENT AGREEMENT DATED DECEMBER 2, 2016 AND RECORDED IN THE ONONDAGA COUNTY CLERK'S OFFICE ON DECEMBER 1.1, 2016 AS INSTRUMENT NUMBER 2016-00057696. EASEMENT IS NOT PLOTTABLE

ZONING

PER REFERENCE #1, THE SUBJECT PROPERTY IS CURRENTLY ZONED CENTRAL BUSINESS DISTRICT, RETAIL DISTRICT (CBD-R)

REFERENCES

1) ZONING DESIGNATION FORM FROM CITY OF SYRACUSE OFFICE OF ZONING ADMINISTRATION DATED JUNE 29, 2018

2) MAP SHOWING THE PROPERTY LINES ON LOTS 23, 24, 25, 26, & 17 IN BLOCK No. 116 SYRACUSE N.Y. BY R. GRAHAM C.E. FILED IN THE ONONDAGA COUNTY CLERK'S OFFICE DECEMBER 9, 1908 AS FILED MAP NUMBER 1261

3) MAP OF RESUBDIVISION OF PART OF LOT 16, ALL OF LOTS 17, 20 & 21, BLOCK 116 INTO NEW LOTS 17A & 17B BY PHILLIPS & ASSOCIATES, P.C. FILED IN THE ONONDAGA COUNTY CLERK'S OFFICE APRIL 20, 2007 AS FILED MAP NUMBER 10644

4) DEED FROM GREATER SYRACUSE PROPERTY DEVELOPMENT CORPORATION TO ADDS BUILDING, LLC RECORDED IN THE ONONDAGA COUNTY CLERK'S OFFICE IN BOOK 5374 OF DEEDS AT PAGE 480

5) CHICAGO TITLE INSURANCE COMPANY COMMITMENT FOR TITLE INSURANCE DATED FEBRUARY 12, 2020 TITLE No.: 2017-09552E

NOTES

1) PER FLOOD INSURANCE RATE MAP NUMBER 36067C0217F, THE SUBJECT PARCEL IS LOCATED WITHIN ZONE X (AREA OF MINIMAL FLOOD HAZARD)

2) THERE WAS NO EVIDENCE OF RECENT EARTH MOVING WORK, EXTERIOR BUILDING CONSTRUCTION, OR BUILDING ADDITIONS OBSERVED IN THE PROCESS OF CONDUCTING THE FIELDWORK

3) SURVEYOR IS NOT AWARE OF ANY PROPOSED CHANGES IN STREET RIGHT OF WAY LINES BY THE CITY OF SYRACUSE. THERE WAS NO EVIDENCE OF RECENT STREET OR SIDEWALK CONSTRUCTION OR REPAIRS OBSERVED IN THE PROCESS OF CONDUCTING THE FIELDWORK

4) THERE WERE NO PARKING SPACES OBSERVED TO BE WITHIN THE LIMITS OF THE BOUNDARIES OF THE SUBJECT PARCEL IN THE PROCESS OF CONDUCTING THE FIELDWORK

5) THE RECORD DESCRIPTION SHOWN ABOVE DESCRIBES THE SAME PROPERTY AS THE TITLE COMMITMENT

6) THE SURVEYOR'S DESCRIPTION SHOWN ABOVE DESCRIBES THE SAME PROPERTY AS THE VESTING DEED SHOWN AT REFERENCE #4

7) UTILITIES SHOWN HEREON HAVE BEEN PLOTTED BY USE OF LIMITED AVAILABLE UTILITY MAPS AND THE LOCATION OF OBSERVED PORTIONS OF UNDERGROUND UTILITY STRUCTURES

8) THE SOUTHERLY 26.43 FEET, MORE OR LESS, OF THE EAST FACE OF BUILDING No. 449-453 IS LOCATED 0.3 FEET, MORE OR LESS, EASTERLY OF THE EAST BOUNDARY OF THE SUBJECT PARCEL DEED LINE. THE DEED FOR ADJACENT PARCEL OF 147 EAST ONONDAGA STREET CORP., APPEARS TO UTILIZE THE "EASTERLY BUILDING FACE OF THE BUILDING NOW OR FORMERLY KNOWN AS THE ADDIS COMPANY BUILDING" AS THE BOUNDARY

9) THE NORTHERLY 30.25 FEET, MORE OR LESS, OF THE EAST FACE OF BUILDING No. 449-453 IS LOCATED 0.4 FEET, MORE OR LESS, EASTERLY OF THE EAST BOUNDARY OF THE SUBJECT PARCEL DEED LINE. THE DEED FOR ADJACENT PARCEL OF ONONDAGA GALLERIES LLC., APPEARS TO UTILIZE THE "EASTERLY WALL OF THE ADDIS COMPANY BUILDING" AS THE BOUNDARY

10) THE DEED LINE OF ONONDAGA GALLERIES LLC PARCEL APPEARS TO BE LOCATED 0.29 FEET, MORE OR LESS, SOUTHERLY OF THE NORTHERLY DEED LINE OF THE SUBJECT PREMISES.

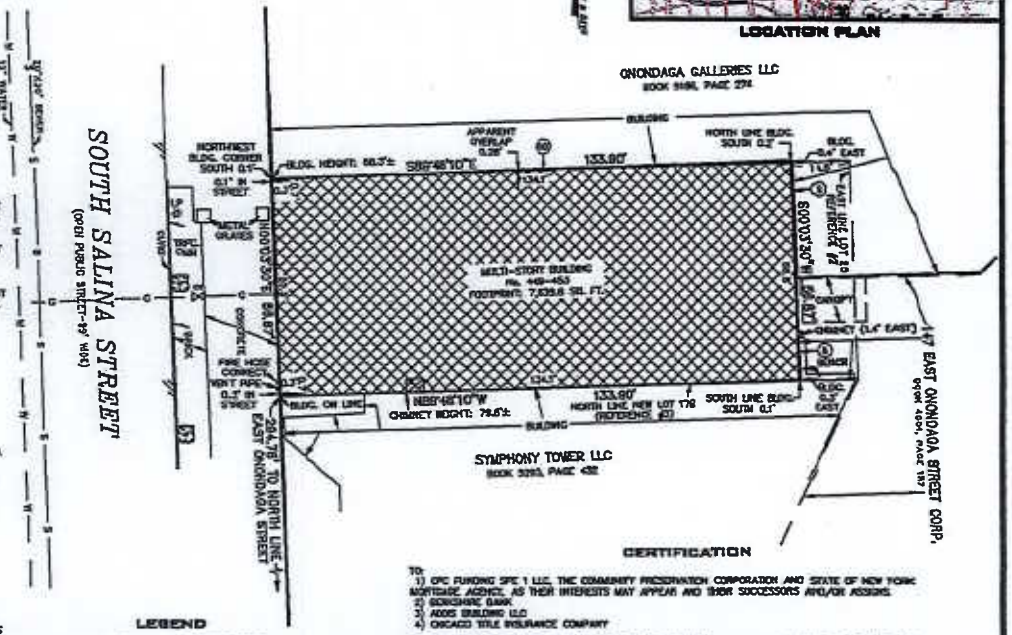

LOCATION PLAN

LEGEND

D	: DRAINAGE LINE
E	: BURIED ELECTRIC
W	: WATER LINE
T	: BURIED TELEPHONE
G	: GAS LINE
S	: SEWER LINE
SV	: SEWER VENT
CO	: CLEAN OUT
MH	: SANITARY SEWER MANHOLE
MH	: STORM SEWER MANHOLE
GV	: GAS VALVE
WV	: WATER VALVE
FH	: HYDRANT
UP	: UTILITY POLE
LP	: LIGHT POLE
CB	: CATCH BASIN
RS	: REBAR SET
8	: NOTE DESIGNATION

GRAPHIC SCALE

(IN FEET)
1 inch = 20 ft.

CERTIFICATION

TO:
1) CPC FUNDING SPE 1 LLC, THE COMMUNITY PRESERVATION CORPORATION AND STATE OF NEW YORK MORTGAGE AGENCY, AS THEIR INTERESTS MAY APPEAR AND THEIR SUCCESSORS AND/OR ASSIGNS
2) SOVERIGN BANK
3) ADDS BUILDING LLC
4) CHICAGO TITLE INSURANCE COMPANY

THIS IS TO CERTIFY THAT THIS MAP OR PLAT AND THE SURVEY ON WHICH IT IS BASED WERE MADE IN ACCORDANCE WITH THE 2014 MINIMUM STANDARD DETAIL REQUIREMENTS FOR ALTA/NSPS LAND TITLE SURVEYS, JOINTLY ESTABLISHED AND ADOPTED BY ALTA AND NSPS, AND INCLUDE ITEMS 2, 3, 4, 6(a), 6(b), 7(a), 7(b)(1), 7(c), 8, 9, 11, 13, 16, 17, 19 AND 20 OF TABLE A THEREOF. THE FIELD WORK WAS COMPLETED ON FEBRUARY 3, 2020

Colin M. Kraft

COLIN M. KRAFT, L.S. LICENSE NUMBER 50450 EMAIL: CKRAFT@LANDLINESPC.COM DATE OF MAP 3/31/2020

ALTA/NSPS LAND TITLE SURVEY

LAND LINES
SURVEYING P.C.
6181 JAMESVILLE TOLL ROAD
JAMESVILLE, NEW YORK 13078
315-492-4604

STATE OF NEW YORK
COLIN M. KRAFT
050450
LICENSED LAND SURVEYOR

COLIN M. KRAFT
LICENSE No. 50450

PART OF LOT 26 IN BLOCK No. 116
CITY OF SYRACUSE
COUNTY OF ONONDAGA
STATE OF NEW YORK
KNOWN AS:
449-453 SOUTH SALINA STREET

DRAWN BY: CMK	DATE: 3/31/2020
SCALE: 1"=20'	DWG.No.: 200225

RECORD DESCRIPTION (SCHEDULE "A" IN REFERENCE #4)

ALL THAT TRACT OR PARCEL OF LAND, SITUATE IN WARD 09 OF THE CITY OF SYRACUSE, COUNTY OF ONONDAGA AND STATE OF NEW YORK BEING LOT P 26 BL 116, AT 449–53 SOUTH SALINA STREET, APPROXIMATELY 55.67 X 148.5 LOT CONTAINING A BRICK BUILDING, PROPERTY NUMBER 0979055001 DESIGNATED AS TAX MAP SECTION 109 BLOCK 06 LOT 02.0 (109.–06–02.0); BEING ALSO DESCRIBED AS:

ALL THAT TRACT OR PARCEL OF LAND, SITUATE IN THE CITY OF SYRACUSE, COUNTY OF ONONDAGA AND STATE OF NEW YORK, TAX MAP ID 109.–06–06.0 IN SAID CITY AND BEING MORE PARTICULARLY DESCRIBED AS FOLLOWS:

BEGINNING AT A POINT IN THE EASTERLY BOUNDARY OF SOUTH SALINA STREET, SAID POINT BEING N. 0° 03' 30" E A DISTANCE OF 294.76 FEET, MEASURED ALONG SAID EASTERLY STREET BOUNDARY, FROM ITS INTERSECTION WITH THE NORTHWESTERLY BOUNDARY OF EAST ONONDAGA STREET; RUNNING THENCE N. 0° 03' 30" E. ALONG SAID EASTERLY STREET BOUNDARY, A DISTANCE OF 56.67 FEET TO A POINT; THENCE S. 89° 48' 10" E. A DISTANCE OF 133.90 FEET TO A POINT; THENCE S. 0° 03' 30" A DISTANCE OF 56.67 FEET TO A POINT; THENCE N. 89° 48' 210" W. A DISTANCE OF 133.90 FEET TO THE POINT AND PLACE OF BEGINNING.

BEING PART OF BLOCKS 116 AND 123 IN SAID CITY. SAID PREMISES BEING COMMONLY KNOWN AS 449–453 SOUTH SALINA STREET SYRACUSE, NEW YORK.

SURVEYOR'S DESCRIPTION

ALL THAT TRACT OR PARCEL OF LAND SITUATE IN THE CITY OF SYRACUSE, COUNTY OF ONONDAGA AND STATE OF NEW YORK BEING PART OF LOT NUMBER 26 AS SHOWN ON A MAP SHOWING THE PROPERTY LINES ON LOTS 23, 24, 25, 26 & 17 IN BLOCK No. 116 SYRACUSE N.Y. RECORDED IN THE ONONDAGA COUNTY CLERK'S OFFICE DECEMBER 9, 1908 AS FILED MAP NUMBER 1261 BEING MORE PARTICULARLY BOUNDED AND DESCRIBED AS FOLLOWS:

BEGINNING AT A POINT IN THE EAST LINE OF SOUTH SALINA STREET LOCATED N 00° 03' 30" E, A DISTANCE OF 294.76 FEET FROM THE INTERSECTION OF THE EAST LINE OF SOUTH SALINA STREET WITH THE NORTHWESTERLY LINE OF EAST ONONDAGA STREET

THENCE: N 00° 03' 30" E, ALONG THE EAST LINE OF SOUTH SALINA STREET, A DISTANCE OF 56.67 FEET TO A POINT IN THE EAST LINE OF SOUTH SALINA STREET

THENCE: S 89° 48' 10" E, A DISTANCE OF 133.90 FEET TO A POINT

THENCE: S 00° 03' 30" W, A DISTANCE OF 56.67 FEET TO A POINT

THENCE: N 89° 48' 10" W, A DISTANCE OF 133.90 FEET TO THE POINT AND PLACE OF BEGINNING.

CONTAINING 7,614.9 SQUARE FEET OR 0.175 ACRES OF LAND, MORE OR LESS

SCHEDULE B

ITEM #8: TOGETHER WITH AND SUBJECT TO THE TERMS, CONDITIONS AND PROVISIONS TO A NON–EXCLUSIVE RIGHT OF INGRESS AND EGRESS EASEMENT WITH ONONDAGA GALLERIES LIMITED LIABILITY COMPANY AS DESCRIBED IN AN EASEMENT AGREEMENT DATED DECEMBER 2, 2018 AND RECORDED IN THE ONONDAGA COUNTY CLERK'S OFFICE ON DECEMBER 13, 2018 AS INSTRUMENT NUMBER 2018–00057694. EASEMENT IS NOT PLOTTABLE

ITEM #9: TOGETHER WITH AND SUBJECT TO THE TERMS, CONDITIONS AND PROVISIONS TO A NON–EXCLUSIVE RIGHT OF INGRESS AND EGRESS EASEMENT WITH 147 EAST ONONDAGA STREET CORP., AS DESCRIBED IN AN EASEMENT AGREEMENT DATED DECEMBER 2, 2018 AND RECORDED IN THE ONONDAGA COUNTY CLERK'S OFFICE ON DECEMBER 13, 2018 AS INSTRUMENT NUMBER 2018–00057695. EASEMENT IS NOT PLOTTABLE

ITEM #10: TOGETHER WITH AND SUBJECT TO THE TERMS, CONDITIONS AND PROVISIONS TO A NON–EXCLUSIVE RIGHT OF INGRESS AND EGRESS EASEMENT WITH ONONDAGA GALLERIES LIMITED LIABILITY COMPANY AS DESCRIBED IN AN EASEMENT AGREEMENT DATED DECEMBER 2, 2018 AND RECORDED IN THE ONONDAGA COUNTY CLERK'S OFFICE ON DECEMBER 13, 2018 AS INSTRUMENT NUMBER 2018–00057696. EASEMENT IS NOT PLOTTABLE

ZONING

PER REFERENCE #1, THE SUBJECT PROPERTY IS CURRENTLY ZONED CENTRAL BUSINESS DISTRICT, RETAIL DISTRICT (CBD–R)

REFERENCES

1) ZONING DESIGNATION FORM FROM CITY OF SYRACUSE OFFICE OF ZONING ADMINISTRATION DATED JUNE 25, 2018

2) MAP SHOWING THE PROPERTY LINES ON LOTS 23, 24, 25, 26, & 17 IN BLOCK No. 116 SYRACUSE N.Y. BY R. GRIFFIN C.E. FILED IN THE ONONDAGA COUNTY CLERK'S OFFICE DECEMBER 9, 1908 AS FILED MAP NUMBER 1261

3) MAP OF RESUBDIVISION OF PART OF LOT 19, ALL OF LOTS 17, 20 & 21, BLOCK 116 INTO NEW LOTS 17A & 17B BY PHILLIPS & ASSOCIATES, P.C. FILED IN THE ONONDAGA COUNTY CLERK'S OFFICE APRIL 23, 2007 AS FILED MAP NUMBER 10644

4) DEED FROM GREATER SYRACUSE PROPERTY DEVELOPMENT CORPORATION TO ADDIS BUILDING, LLC RECORDED IN THE ONONDAGA COUNTY CLERK'S OFFICE IN BOOK 5376 OF DEEDS AT PAGE 460

5) CHICAGO TITLE INSURANCE COMPANY COMMITMENT FOR TITLE INSURANCE DATED FEBRUARY 12, 2020 TITLE No.: 2017–08580

NOTES

1) PER FLOOD INSURANCE RATE MAP NUMBER 36067C0215F, THE SUBJECT PARCEL IS LOCATED WITHIN ZONE X (AREA OF MINIMAL FLOOD HAZARD)

2) THERE WAS NO EVIDENCE OF RECENT EARTH MOVING WORK, EXTERIOR BUILDING CONSTRUCTION, OR BUILDING ADDITIONS OBSERVED IN THE PROCESS OF CONDUCTING THE FIELDWORK

3) SURVEYOR IS NOT AWARE OF ANY PROPOSED CHANGES IN STREET RIGHT OF WAY LINES BY THE CITY OF SYRACUSE. THERE WAS NO EVIDENCE OF RECENT STREET OR SIDEWALK CONSTRUCTION OR REPAIRS OBSERVED IN THE PROCESS OF CONDUCTING THE FIELDWORK

4) THERE WERE NO PARKING SPACES OBSERVED TO BE WITHIN THE LIMITS OF THE BOUNDARIES OF THE SUBJECT PARCEL IN THE PROCESS OF CONDUCTING THE FIELDWORK

5) THE RECORD DESCRIPTION SHOWN ABOVE DESCRIBES THE SAME PROPERTY AS THE TITLE COMMITMENT

6) THE SURVEYOR'S DESCRIPTION SHOWN ABOVE DESCRIBES THE SAME PROPERTY AS THE VESTING DEED SHOWN AT REFERENCE #4

7) UTILITIES SHOWN HEREON HAVE BEEN PLOTTED BY USE OF LIMITED AVAILABLE UTILITY MAPS AND THE LOCATION OF OBSERVED PORTIONS OF UNDERGROUND UTILITY STRUCTURES

8) THE SOUTHERLY 26.43 FEET, MORE OR LESS, OF THE EAST FACE OF BUILDING No. 449–453 IS LOCATED 0.3 FEET, MORE OR LESS, EASTERLY OF THE EAST BOUNDARY OF THE SUBJECT PARCEL DEED LINE. THE DEED FOR ADJACENT PARCEL OF 147 EAST ONONDAGA STREET CORP., APPEARS TO UTILIZE THE "EASTERLY BUILDING FACE OF THE BUILDING NOW OR FORMERLY KNOWN AS THE ADDIS COMPANY BUILDING" AS THE BOUNDARY

9) THE NORTHERLY 30.25 FEET, MORE OR LESS, OF THE EAST FACE OF BUILDING No. 449–453 IS LOCATED 0.4 FEET, MORE OR LESS, EASTERLY OF THE EAST BOUNDARY OF THE SUBJECT PARCEL DEED LINE. THE DEED FOR ADJACENT PARCEL OF ONONDAGA GALLERIES LLC., APPEARS TO UTILIZE THE "EASTERLY WALL OF THE ADDIS COMPANY BUILDING" AS THE BOUNDARY

10) THE DEED LINE OF ONONDAGA GALLERIES LLC PARCEL APPEARS TO BE LOCATED 0.29 FEET, MORE OR LESS, SOUTHERLY OF THE NORTHERLY DEED LINE OF THE SUBJECT PREMISES.

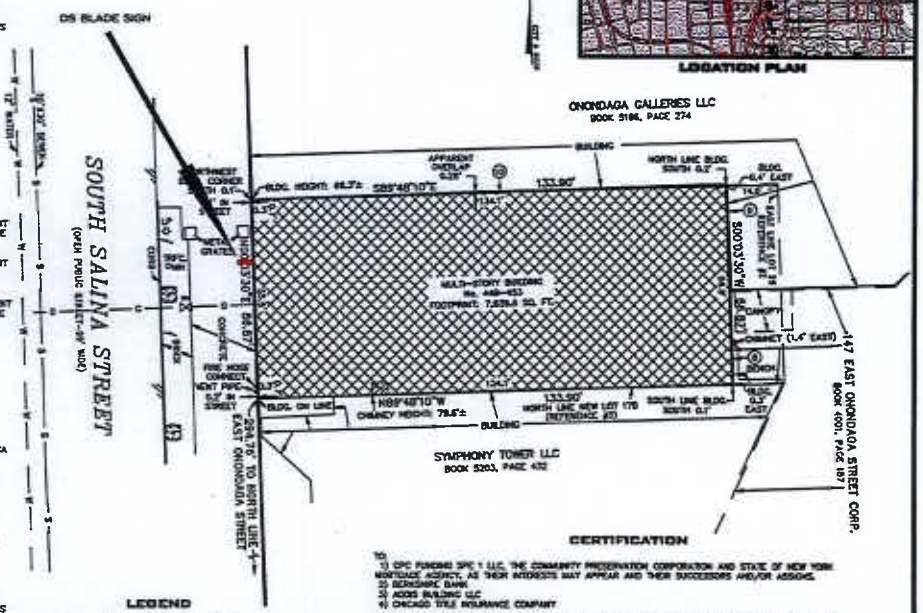

LOCATION PLAN

LEGEND

D	: DRAINAGE LINE
E	: BURIED ELECTRIC
W	: WATER LINE
T	: BURIED TELEPHONE
G	: GAS LINE
S	: SEWER LINE
SV	: SEWER VENT
CO	: CLEAN OUT
SM	: SANITARY SEWER MANHOLE
MH	: STORM SEWER MANHOLE
GV	: GAS VALVE
WV	: WATER VALVE
	: HYDRANT
	: UTILITY POLE
LP	: LIGHT POLE
CB	: CATCH BASIN
RS	: REBAR SET
8	: NOTE DESIGNATION

GRAPHIC SCALE

(IN FEET)
1 inch = 20 ft.

CERTIFICATION

TO:
1) CPC FUNDING SPC 1 LLC, THE COMMUNITY PRESERVATION CORPORATION AND STATE OF NEW YORK MORTGAGE AGENCY, AS THEIR INTERESTS MAY APPEAR AND THEIR SUCCESSORS AND/OR ASSIGNS.
2) BENSONHURST BANK
3) ADDIS BUILDING LLC
4) CHICAGO TITLE INSURANCE COMPANY

THIS IS TO CERTIFY THAT THIS MAP OR PLAT AND THE SURVEY ON WHICH IT IS BASED WERE MADE IN ACCORDANCE WITH THE 2016 MINIMUM STANDARD DETAIL REQUIREMENTS FOR ALTA/NSPS LAND TITLE SURVEYS, JOINTLY ESTABLISHED AND ADOPTED BY ALTA AND NSPS, AND INCLUDES ITEMS 2, 3, 4, 6(a), 6(b), 7(a), 7(b)(1), 7(c), 8, 9, 11, 13, 16, 17, 19 AND 20 OF TABLE A THEREOF. THE FIELD WORK WAS COMPLETED ON FEBRUARY 5, 2020

Colin M. Kraft

COLIN M. KRAFT, L.S. LICENSE NUMBER 50450 EMAIL: CKRAFT@LANDLINESPC.COM DATE OF MAP 3/31/2020

ALTA/NSPS LAND TITLE SURVEY

LAND LINES SURVEYING, P.C.
8181 JAMESVILLE TOLL ROAD
JAMESVILLE, NEW YORK 13078
315–492–4804

STATE OF NEW YORK · COLIN M. KRAFT · 50450 · LICENSED LAND SURVEYOR

COLIN M. KRAFT
LICENSE No. 50450

PART OF LOT 26 IN BLOCK No. 116
CITY OF SYRACUSE
COUNTY OF ONONDAGA
STATE OF NEW YORK
KNOWN AS:
449–453 SOUTH SALINA STREET

DRAWN BY: CMK	DATE: 3/31/2020
SCALE: 1"=20'	DWG.No.: 200223

35

DEPARTMENT OF PUBLIC WORKS

CITY OF SYRACUSE, MAYOR BEN WALSH

Jeremy Robinson
Commissioner

Ann Fordock
Deputy Commissioner

Martin E. Davis, L.S.
Deputy Commissioner

March 24, 2021

Ms. Patricia McBride
City Clerk
City Hall
Room 231
Syracuse, NY 13202

Re: Legislation Request – Permission for Encroachment (**PC-0106-22**)

Dear Ms. McBride,

Joseph Gehm on behalf of *Addis Building, LLC.* is requesting an Encroachment Waiver for a blade sign. This feature will encroach 9.5 feet into the South Salina Street right-of-way.

The applicant's mailing address is as follows:

100 Madison Street
Suite 1905
Syracuse, NY 13202

The proposed encroachment has been reviewed by various City departments and utility companies. Returned comments are enclosed. It appears that there is no major impediment to the request.

Please prepare legislation for consideration at the next meeting of the Common Council.

Please let me know if you have any questions relative to this request.

Sincerely,

Jeremy Robinson

Jeremy Robinson
Commissioner, Department of Public Works

Dept. of Public Works
1200 Canal St. Extension
Syracuse, N.Y. 13202

Office 315 448-2489
Fax 315 448-8531

www.syrgov.net

14

Ordinance No. 2022

ORDINANCE AUTHORIZING SALE OF ALL THE RIGHT, TITLE AND INTEREST OF THE CITY OF SYRACUSE IN AND TO 116 BERGER AVENUE FOR A TOTAL OF $151.00

WHEREAS, the Commissioner of Assessment hereby requests an ordinance authorizing the sale of all the right, title and interest of the City of Syracuse in and to the premises known as 116 Berger Avenue, being Lot 5, Block E, Tract Logan Amd, Section 075, Block -14, Lot -09.0 (075.-14-09.0), Property No. 1308002800, 33 x 94 Wood House & Garage to Greater Syracuse Property Development Corporation for a total of $151.00; NOW, THEREFORE,

BE IT ORDAINED, subject to the approval of the Mayor, that upon payment to the Commissioner of Finance of the sum of $1.00 plus $150.00 for title work for a total of $151.00 by Greater Syracuse Property Development Corporation, the said Commissioner of Finance be and he hereby is authorized to apply the sum of $1.00 toward the payment of delinquent taxes, exclusive of fees and penalties, to cancel and discharge said delinquency, and to issue his receipts and discharges thereof, charging the uncollected taxes to account #269404.01 and the cost of title fee of $150.00 deposited to account #426620.01; the City of Syracuse to pay all quarters due at the date of closing, for the current year's tax, said share of pro-rated tax to be determined by the Commissioner of Finance; this bid is contingent upon the City of Syracuse discharging any miscellaneous charges not presently a lien against the said premises; and the Mayor is hereby authorized and empowered to make, execute and deliver a deed of the City's right, title and interest in and to said premises to Greater Syracuse Property Development Corporation, said deed to be approved as to manner, form and execution by the Corporation Counsel.

36

DEPARTMENT OF ASSESSMENT

CITY OF SYRACUSE, MAYOR BEN WALSH

March 21, 2022

Matthew D. Oja
Commissioner

Ann E. Gallagher
First Deputy Commissioner
Director of Operations

City Clerk Patricia K. McBride
230 City Hall
Syracuse, New York 13202

Attn: Members of the Common Council

Dear City Clerk McBride:

RE: REQUEST FOR ORDINANCE TO AUTHORIZE SALE OF ALL THE RIGHT, TITLE AND INTEREST OF THE CITY OF SYRACUSE IN AND TO THE PREMISES KNOWN AS: 116 BERGER AVE. TO GREATER SYRACUSE PROPERTY DEVELOPMENT CORPORATION FOR A TOTAL OF $151.

This Department requests an ordinance to authorize sale of all the right, title and interest of the City of Syracuse in and to the premises known as:

116 Berger Ave.
Lot 5 Bl E Tr Logan Amd
075.-14-09.0
Property #: 1308002800
33x94 Whxgar
Purchaser: GREATER SYRACUSE PROPERTY DEVELOPMENT CORPORATION.

The Commissioner of Finance shall apply $1.00 of the purchase price by the proposed purchaser toward the payment of the delinquent taxes, excluding fees and penalties. Said Commissioner shall determine the amount, issue his warrant, cancel and discharges. The allowance for uncollected taxes shall be charged to 269404 01. A fee of $150 for title work will be collected and deposited into account 426620 01.

The City of Syracuse shall discharge all quarters due at the time of closing for the current year's tax. The pro-ration shall be determined by the Commissioner of Finance. This bid is contingent upon the City discharging miscellaneous and any other charges not presently a lien against the said premises.

Sincerely,

Matthew D. Oja
Commissioner

Department of Assessment
233 E. Washington St
City Hall, Room 130
Syracuse, N.Y. 13202

Office 315 448 8270
Fax 315 448 8190

assessment@syrgov.net

Ordinance No. 2022

ORDINANCE AUTHORIZING SALE OF ALL THE RIGHT, TITLE AND INTEREST OF THE CITY OF SYRACUSE IN AND TO 118 BERGER AVENUE FOR A TOTAL OF $151.00

WHEREAS, the Commissioner of Assessment hereby requests an ordinance authorizing the sale of all the right, title and interest of the City of Syracuse in and to the premises known as 118 Berger Avenue, being Lot 6, Block E, Tract Logan Amd, Section 075, Block -14, Lot -10.0 (075.-14-10.0), Property No. 1308002900, 33 x 94 Wood House & Garage to Greater Syracuse Property Development Corporation for a total of $151.00; NOW, THEREFORE,

BE IT ORDAINED, subject to the approval of the Mayor, that upon payment to the Commissioner of Finance of the sum of $1.00 plus $150.00 for title work for a total of $151.00 by Greater Syracuse Property Development Corporation, the said Commissioner of Finance be and he hereby is authorized to apply the sum of $1.00 toward the payment of delinquent taxes, exclusive of fees and penalties, to cancel and discharge said delinquency, and to issue his receipts and discharges thereof, charging the uncollected taxes to account #269404.01 and the cost of title fee of $150.00 deposited to account #426620.01; the City of Syracuse to pay all quarters due at the date of closing, for the current year's tax, said share of pro-rated tax to be determined by the Commissioner of Finance; this bid is contingent upon the City of Syracuse discharging any miscellaneous charges not presently a lien against the said premises; and the Mayor is hereby authorized and empowered to make, execute and deliver a deed of the City's right, title and interest in and to said premises to Greater Syracuse Property Development Corporation, said deed to be approved as to manner, form and execution by the Corporation Counsel.

37

DEPARTMENT OF ASSESSMENT

CITY OF SYRACUSE, MAYOR BEN WALSH

March 21, 2022

Matthew D. Oja
Commissioner

Ann E. Gallagher
First Deputy Commissioner
Director of Operations

City Clerk Patricia K. McBride
230 City Hall
Syracuse, New York 13202

Attn: Members of the Common Council

Dear City Clerk McBride:

RE: REQUEST FOR ORDINANCE TO AUTHORIZE SALE OF ALL THE RIGHT, TITLE AND INTEREST OF THE CITY OF SYRACUSE IN AND TO THE PREMISES KNOWN AS: 118 BERGER AVE. TO GREATER SYRACUSE PROPERTY DEVELOPMENT CORPORATION FOR A TOTAL OF $151.

This Department requests an ordinance to authorize sale of all the right, title and interest of the City of Syracuse in and to the premises known as:

118 Berger Ave.
Lot 6 Bl E Tr Logan Amd
075.-14-10.0
Property #: 1308002900
33x94 Whxgar
Purchaser: GREATER SYRACUSE PROPERTY DEVELOPMENT CORPORATION.

The Commissioner of Finance shall apply $1.00 of the purchase price by the proposed purchaser toward the payment of the delinquent taxes, excluding fees and penalties. Said Commissioner shall determine the amount, issue his warrant, cancel and discharges. The allowance for uncollected taxes shall be charged to 269404 01. A fee of $150 for title work will be collected and deposited into account 426620 01.

The City of Syracuse shall discharge all quarters due at the time of closing for the current year's tax. The pro-ration shall be determined by the Commissioner of Finance. This bid is contingent upon the City discharging miscellaneous and any other charges not presently a lien against the said premises.

Sincerely,

Matthew D. Oja
Commissioner

Department of Assessment
233 E. Washington St
City Hall, Room 130
Syracuse, N.Y. 13202

Office 315 448 8270
Fax 315 448 8190

assessment@syrgov.net

Ordinance No. 2022

ORDINANCE AUTHORIZING SALE OF ALL THE RIGHT, TITLE AND INTEREST OF THE CITY OF SYRACUSE IN AND TO 130 BERGER AVENUE FOR A TOTAL OF $151.00

WHEREAS, the Commissioner of Assessment hereby requests an ordinance authorizing the sale of all the right, title and interest of the City of Syracuse in and to the premises known as 130 Berger Avenue, being Lot 10, Block E, Tract Logan Amd, Section 075, Block -14, Lot -14.0 (075.-14-14.0), Property No. 1308003300, 33 x 94 Wood House to Greater Syracuse Property Development Corporation for a total of $151.00; NOW, THEREFORE,

BE IT ORDAINED, subject to the approval of the Mayor, that upon payment to the Commissioner of Finance of the sum of $1.00 plus $150.00 for title work for a total of $151.00 by Greater Syracuse Property Development Corporation, the said Commissioner of Finance be and he hereby is authorized to apply the sum of $1.00 toward the payment of delinquent taxes, exclusive of fees and penalties, to cancel and discharge said delinquency, and to issue his receipts and discharges thereof, charging the uncollected taxes to account #269404.01 and the cost of title fee of $150.00 deposited to account #426620.01; the City of Syracuse to pay all quarters due at the date of closing, for the current year's tax, said share of pro-rated tax to be determined by the Commissioner of Finance; this bid is contingent upon the City of Syracuse discharging any miscellaneous charges not presently a lien against the said premises; and the Mayor is hereby authorized and empowered to make, execute and deliver a deed of the City's right, title and interest in and to said premises to Greater Syracuse Property Development Corporation, said deed to be approved as to manner, form and execution by the Corporation Counsel.

38

DEPARTMENT OF ASSESSMENT

CITY OF SYRACUSE, MAYOR BEN WALSH

March 21, 2022

Matthew D. Oja
Commissioner

Ann E. Gallagher
First Deputy Commissioner
Director of Operations

City Clerk Patricia K. McBride
230 City Hall
Syracuse, New York 13202

Attn: Members of the Common Council

Dear City Clerk McBride:

RE: REQUEST FOR ORDINANCE TO AUTHORIZE SALE OF ALL THE RIGHT, TITLE AND INTEREST OF THE CITY OF SYRACUSE IN AND TO THE PREMISES KNOWN AS: 130 BERGER AVE. TO GREATER SYRACUSE PROPERTY DEVELOPMENT CORPORATION FOR A TOTAL OF $151.

This Department requests an ordinance to authorize sale of all the right, title and interest of the City of Syracuse in and to the premises known as:

130 Berger Ave.
Lot 1o Bl E Tr Logan
075.-14- 14.0
Property #: 1308003300
33x94 Wh
Purchaser: GREATER SYRACUSE PROPERTY DEVELOPMENT CORPORATION.

The Commissioner of Finance shall apply $1.00 of the purchase price by the proposed purchaser toward the payment of the delinquent taxes, excluding fees and penalties. Said Commissioner shall determine the amount, issue his warrant, cancel and discharges. The allowance for uncollected taxes shall be charged to 269404 01. A fee of $150 for title work will be collected and deposited into account 426620 01.

The City of Syracuse shall discharge all quarters due at the time of closing for the current year's tax. The pro-ration shall be determined by the Commissioner of Finance. This bid is contingent upon the City discharging miscellaneous and any other charges not presently a lien against the said premises.

Sincerely,

Matthew D. Oja
Commissioner

Department of Assessment
233 E. Washington St
City Hall, Room 130
Syracuse, N.Y. 13202

Office 315 448 8270
Fax 315 448 8190

assessment@syrgov.net

Ordinance No. 2022

ORDINANCE AUTHORIZING SALE OF ALL THE RIGHT, TITLE AND INTEREST OF THE CITY OF SYRACUSE IN AND TO 131 BERGER AVENUE FOR A TOTAL OF $151.00

WHEREAS, the Commissioner of Assessment hereby requests an ordinance authorizing the sale of all the right, title and interest of the City of Syracuse in and to the premises known as 131 Berger Avenue, being Lot 55, Block A, Tract Logan, Section 075, Block -13, Lot -47.0 (075.-13-47.0), Property No. 1308000700, 33 x 100 Wood House & Garage to Greater Syracuse Property Development Corporation for a total of $151.00; NOW, THEREFORE,

BE IT ORDAINED, subject to the approval of the Mayor, that upon payment to the Commissioner of Finance of the sum of $1.00 plus $150.00 for title work for a total of $151.00 by Greater Syracuse Property Development Corporation, the said Commissioner of Finance be and he hereby is authorized to apply the sum of $1.00 toward the payment of delinquent taxes, exclusive of fees and penalties, to cancel and discharge said delinquency, and to issue his receipts and discharges thereof, charging the uncollected taxes to account #269404.01 and the cost of title fee of $150.00 deposited to account #426620.01; the City of Syracuse to pay all quarters due at the date of closing, for the current year's tax, said share of pro-rated tax to be determined by the Commissioner of Finance; this bid is contingent upon the City of Syracuse discharging any miscellaneous charges not presently a lien against the said premises; and the Mayor is hereby authorized and empowered to make, execute and deliver a deed of the City's right, title and interest in and to said premises to Greater Syracuse Property Development Corporation, said deed to be approved as to manner, form and execution by the Corporation Counsel.

39

DEPARTMENT OF ASSESSMENT

CITY OF SYRACUSE, MAYOR BEN WALSH

March 21, 2022

Matthew D. Oja
Commissioner

Ann E. Gallagher
First Deputy Commissioner
Director of Operations

City Clerk Patricia K. McBride
230 City Hall
Syracuse, New York 13202

Attn: Members of the Common Council

Dear City Clerk McBride:

RE: REQUEST FOR ORDINANCE TO AUTHORIZE SALE OF ALL THE RIGHT, TITLE AND INTEREST OF THE CITY OF SYRACUSE IN AND TO THE PREMISES KNOWN AS: 131 BERGER AVE. TO GREATER SYRACUSE PROPERTY DEVELOPMENT CORPORATION FOR A TOTAL OF $151.

This Department requests an ordinance to authorize sale of all the right, title and interest of the City of Syracuse in and to the premises known as:

131 Berger Ave.
Lot 55 Bl A Tr Logan
075.-13-47.0
Property #: 1308000700
33x100 Wh & Gar
Purchaser: GREATER SYRACUSE PROPERTY DEVELOPMENT CORPORATION.

The Commissioner of Finance shall apply $1.00 of the purchase price by the proposed purchaser toward the payment of the delinquent taxes, excluding fees and penalties. Said Commissioner shall determine the amount, issue his warrant, cancel and discharges. The allowance for uncollected taxes shall be charged to 269404 01. A fee of $150 for title work will be collected and deposited into account 426620 01.

The City of Syracuse shall discharge all quarters due at the time of closing for the current year's tax. The pro-ration shall be determined by the Commissioner of Finance. This bid is contingent upon the City discharging miscellaneous and any other charges not presently a lien against the said premises.

Sincerely,

Matthew D. Oja
Commissioner

Department of Assessment
233 E. Washington St
City Hall, Room 130
Syracuse, N.Y. 13202

Office 315 448 8270
Fax 315 448 8190

assessment@syrgov.net

Ordinance No. 2022

ORDINANCE AUTHORIZING SALE OF ALL THE RIGHT, TITLE AND INTEREST OF THE CITY OF SYRACUSE IN AND TO 630 CATHERINE STREET FOR A TOTAL OF $151.00

WHEREAS, the Commissioner of Assessment hereby requests an ordinance authorizing the sale of all the right, title and interest of the City of Syracuse in and to the premises known as 630 Catherine Street, being Lot 16, Block 282 a, Tract Prospect Hill, Section 016, Block -05, Lot -40.0 (016.-05-40.0), Property No. 0915004400, 66 x 159 Wood House to Greater Syracuse Property Development Corporation for a total of $151.00; NOW, THEREFORE,

BE IT ORDAINED, subject to the approval of the Mayor, that upon payment to the Commissioner of Finance of the sum of $1.00 plus $150.00 for title work for a total of $151.00 by Greater Syracuse Property Development Corporation, the said Commissioner of Finance be and he hereby is authorized to apply the sum of $1.00 toward the payment of delinquent taxes, exclusive of fees and penalties, to cancel and discharge said delinquency, and to issue his receipts and discharges thereof, charging the uncollected taxes to account #269404.01 and the cost of title fee of $150.00 deposited to account #426620.01; the City of Syracuse to pay all quarters due at the date of closing, for the current year's tax, said share of pro-rated tax to be determined by the Commissioner of Finance; this bid is contingent upon the City of Syracuse discharging any miscellaneous charges not presently a lien against the said premises; and the Mayor is hereby authorized and empowered to make, execute and deliver a deed of the City's right, title and interest in and to said premises to Greater Syracuse Property Development Corporation, said deed to be approved as to manner, form and execution by the Corporation Counsel.

40

DEPARTMENT OF ASSESSMENT

CITY OF SYRACUSE, MAYOR BEN WALSH

March 21, 2022

Matthew D. Oja
Commissioner

Ann E. Gallagher
First Deputy Commissioner
Director of Operations

City Clerk Patricia K. McBride
230 City Hall
Syracuse, New York 13202

Attn: Members of the Common Council

Dear City Clerk McBride:

RE: REQUEST FOR ORDINANCE TO AUTHORIZE SALE OF ALL THE RIGHT, TITLE AND INTEREST OF THE CITY OF SYRACUSE IN AND TO THE PREMISES KNOWN AS: 630 CATHERINE ST. TO GREATER SYRACUSE PROPERTY DEVELOPMENT CORPORATION FOR A TOTAL OF $151.

This Department requests an ordinance to authorize sale of all the right, title and interest of the City of Syracuse in and to the premises known as:

630 Catherine St.
Lot 16 Bl282a Tr Pros Hil
016.-05-40.0
Property #: 0915004400
66x159 Wh
Purchaser: GREATER SYRACUSE PROPERTY DEVELOPMENT CORPORATION.

The Commissioner of Finance shall apply $1.00 of the purchase price by the proposed purchaser toward the payment of the delinquent taxes, excluding fees and penalties. Said Commissioner shall determine the amount, issue his warrant, cancel and discharges. The allowance for uncollected taxes shall be charged to 269404 01. A fee of $150 for title work will be collected and deposited into account 426620 01.

The City of Syracuse shall discharge all quarters due at the time of closing for the current year's tax. The pro-ration shall be determined by the Commissioner of Finance. This bid is contingent upon the City discharging miscellaneous and any other charges not presently a lien against the said premises.

Sincerely,

Matthew D. Oja
Commissioner

Department of Assessment
233 E. Washington St
City Hall, Room 130
Syracuse, N.Y. 13202

Office 315 448 8270
Fax 315 448 8190

assessment@syrgov.net

41

Ordinance No. 2022

ORDINANCE AUTHORIZING SALE OF ALL THE RIGHT, TITLE AND INTEREST OF THE CITY OF SYRACUSE IN AND TO 230 CLEVELAND AVENUE FOR A TOTAL OF $151.00

WHEREAS, the Commissioner of Assessment hereby requests an ordinance authorizing the sale of all the right, title and interest of the City of Syracuse in and to the premises known as 230 Cleveland Avenue, being Lot 43, Block 109 b, Tract Sack, Section 010, Block -19, Lot -12.0 (010.-19-12.0), Property No. 0317004200, 33 x 121 Wood House to Greater Syracuse Property Development Corporation for a total of $151.00; NOW, THEREFORE,

BE IT ORDAINED, subject to the approval of the Mayor, that upon payment to the Commissioner of Finance of the sum of $1.00 by Greater Syracuse Property Development Corporation, the said Commissioner of Finance be and he hereby is authorized to apply the sum of $1.00 toward the payment of delinquent taxes, exclusive of fees and penalties, to cancel and discharge said delinquency, and to issue his receipts and discharges thereof, charging the uncollected taxes to account #269404.01; the City of Syracuse to pay all quarters due at the date of closing, for the current year's tax, said share of pro-rated tax to be determined by the Commissioner of Finance; this bid is contingent upon the City of Syracuse discharging any miscellaneous charges not presently a lien against the said premises; and the Mayor is hereby authorized and empowered to make, execute and deliver a deed of the City's right, title and interest in and to said premises to Greater Syracuse Property Development Corporation, said deed to be approved as to manner, form and execution by the Corporation Counsel.

41

DEPARTMENT OF ASSESSMENT

CITY OF SYRACUSE, MAYOR BEN WALSH

March 21, 2022

Matthew D. Oja
Commissioner

Ann E. Gallagher
First Deputy Commissioner
Director of Operations

City Clerk Patricia K. McBride
230 City Hall
Syracuse, New York 13202

Attn: Members of the Common Council

Dear City Clerk McBride:

RE: REQUEST FOR ORDINANCE TO AUTHORIZE SALE OF ALL THE RIGHT, TITLE AND INTEREST OF THE CITY OF SYRACUSE IN AND TO THE PREMISES KNOWN AS: 230 CLEVELAND AVE. TO GREATER SYRACUSE PROPERTY DEVELOPMENT CORPORATION FOR A TOTAL OF $151.

This Department requests an ordinance to authorize sale of all the right, title and interest of the City of Syracuse in and to the premises known as:

230 Cleveland Ave.
Lot 43 Bl 109b Tr Sack
010.-19-12.0
Property #: 0317004200
33x121 Wh
Purchaser: GREATER SYRACUSE PROPERTY DEVELOPMENT CORPORATION.

The Commissioner of Finance shall apply $1.00 of the purchase price by the proposed purchaser toward the payment of the delinquent taxes, excluding fees and penalties. Said Commissioner shall determine the amount, issue his warrant, cancel and discharges. The allowance for uncollected taxes shall be charged to 269404 01. A fee of $150 for title work will be collected and deposited into account 426620 01.

The City of Syracuse shall discharge all quarters due at the time of closing for the current year's tax. The pro-ration shall be determined by the Commissioner of Finance. This bid is contingent upon the City discharging miscellaneous and any other charges not presently a lien against the said premises.

Sincerely,

Matthew D. Oja
Commissioner

Department of Assessment
233 E. Washington St
City Hall, Room 130
Syracuse, N.Y. 13202

Office 315 448 8270
Fax 315 448 8190

assessment@syrgov.net

Ordinance No. 2022

ORDINANCE AUTHORIZING SALE OF ALL THE RIGHT, TITLE AND INTEREST OF THE CITY OF SYRACUSE IN AND TO 258-260 CRESCENT AVENUE FOR A TOTAL OF $151.00

WHEREAS, the Commissioner of Assessment hereby requests an ordinance authorizing the sale of all the right, title and interest of the City of Syracuse in and to the premises known as 258-260 Crescent Avenue, being Lot 57, Block 1026 b, Tract Union A D, Section 086, Block -19, Lot -24.0 (086.-19-24.0), Property No. 1220002400, 40 x 100 Wood House & Garage to Greater Syracuse Property Development Corporation for a total of $151.00; NOW, THEREFORE,

BE IT ORDAINED, subject to the approval of the Mayor, that upon payment to the Commissioner of Finance of the sum of $1.00 plus $150.00 for title work for a total of $151.00 by Greater Syracuse Property Development Corporation, the said Commissioner of Finance be and he hereby is authorized to apply the sum of $1.00 toward the payment of delinquent taxes, exclusive of fees and penalties, to cancel and discharge said delinquency, and to issue his receipts and discharges thereof, charging the uncollected taxes to account #269404.01 and the cost of title fee of $150.00 deposited to account #426620.01; the City of Syracuse to pay all quarters due at the date of closing, for the current year's tax, said share of pro-rated tax to be determined by the Commissioner of Finance; this bid is contingent upon the City of Syracuse discharging any miscellaneous charges not presently a lien against the said premises; and the Mayor is hereby authorized and empowered to make, execute and deliver a deed of the City's right, title and interest in and to said premises to Greater Syracuse Property Development Corporation, said deed to be approved as to manner, form and execution by the Corporation Counsel.

DEPARTMENT OF ASSESSMENT

CITY OF SYRACUSE, MAYOR BEN WALSH

March 21, 2022

Matthew D. Oja
Commissioner

Ann E. Gallagher
First Deputy Commissioner
Director of Operations

City Clerk Patricia K. McBride
230 City Hall
Syracuse, New York 13202

Attn: Members of the Common Council

Dear City Clerk McBride:

RE: REQUEST FOR ORDINANCE TO AUTHORIZE SALE OF ALL THE RIGHT, TITLE AND INTEREST OF THE CITY OF SYRACUSE IN AND TO THE PREMISES KNOWN AS: 258-60 CRESCENT AVE. TO GREATER SYRACUSE PROPERTY DEVELOPMENT CORPORATION FOR A TOTAL OF $151.

This Department requests an ordinance to authorize sale of all the right, title and interest of the City of Syracuse in and to the premises known as:

258-60 Crescent Ave.
Lot 57 Bl 1026b Tr Union A D
086.-19-24.0
Property #: 1220002400
40x100 Whxgar
Purchaser: GREATER SYRACUSE PROPERTY DEVELOPMENT CORPORATION.

The Commissioner of Finance shall apply $1.00 of the purchase price by the proposed purchaser toward the payment of the delinquent taxes, excluding fees and penalties. Said Commissioner shall determine the amount, issue his warrant, cancel and discharges. The allowance for uncollected taxes shall be charged to 269404 01. A fee of $150 for title work will be collected and deposited into account 426620 01.

The City of Syracuse shall discharge all quarters due at the time of closing for the current year's tax. The pro-ration shall be determined by the Commissioner of Finance. This bid is contingent upon the City discharging miscellaneous and any other charges not presently a lien against the said premises.

Sincerely,

Matthew D. Oja
Commissioner

Department of Assessment
233 E. Washington St
City Hall, Room 130
Syracuse, N.Y. 13202

Office 315 448 8270
Fax 315 448 8190

assessment@syrgov.net

Ordinance No. 2022

ORDINANCE AUTHORIZING SALE OF ALL THE RIGHT, TITLE AND INTEREST OF THE CITY OF SYRACUSE IN AND TO 1029 DANFORTH STREET FOR A TOTAL OF $151.00

WHEREAS, the Commissioner of Assessment hereby requests an ordinance authorizing the sale of all the right, title and interest of the City of Syracuse in and to the premises known as 1029 Danforth Street, being Block 75, Section 006, Block -16, Lot -11.0 (006.-16-11.0), Property No. 0121007100, 40 x 120 Wood House & Garage to Greater Syracuse Property Development Corporation for a total of $151.00; NOW, THEREFORE,

BE IT ORDAINED, subject to the approval of the Mayor, that upon payment to the Commissioner of Finance of the sum of $1.00 plus $150.00 for title work for a total of $151.00 by Greater Syracuse Property Development Corporation, the said Commissioner of Finance be and he hereby is authorized to apply the sum of $1.00 toward the payment of delinquent taxes, exclusive of fees and penalties, to cancel and discharge said delinquency, and to issue his receipts and discharges thereof, charging the uncollected taxes to account #269404.01 and the cost of title fee of $150.00 deposited to account #426620.01; the City of Syracuse to pay all quarters due at the date of closing, for the current year's tax, said share of pro-rated tax to be determined by the Commissioner of Finance; this bid is contingent upon the City of Syracuse discharging any miscellaneous charges not presently a lien against the said premises; and the Mayor is hereby authorized and empowered to make, execute and deliver a deed of the City's right, title and interest in and to said premises to Greater Syracuse Property Development Corporation, said deed to be approved as to manner, form and execution by the Corporation Counsel.

43

DEPARTMENT OF ASSESSMENT

CITY OF SYRACUSE, MAYOR BEN WALSH

March 21, 2022

Matthew D. Oja
Commissioner

Ann E. Gallagher
First Deputy Commissioner
Director of Operations

City Clerk Patricia K. McBride
230 City Hall
Syracuse, New York 13202

Attn: Members of the Common Council

Dear City Clerk McBride:

RE: REQUEST FOR ORDINANCE TO AUTHORIZE SALE OF ALL THE RIGHT, TITLE AND INTEREST OF THE CITY OF SYRACUSE IN AND TO THE PREMISES KNOWN AS: 1029 DANFORTH ST. TO GREATER SYRACUSE PROPERTY DEVELOPMENT CORPORATION FOR A TOTAL OF $151.

This Department requests an ordinance to authorize sale of all the right, title and interest of the City of Syracuse in and to the premises known as:

1029 Danforth St.
Bl 75
006.-16-11.0
Property #: 0121007100
4ox120 Whxgar
Purchaser: GREATER SYRACUSE PROPERTY DEVELOPMENT CORPORATION.

The Commissioner of Finance shall apply $1.00 of the purchase price by the proposed purchaser toward the payment of the delinquent taxes, excluding fees and penalties. Said Commissioner shall determine the amount, issue his warrant, cancel and discharges. The allowance for uncollected taxes shall be charged to 269404 01. A fee of $150 for title work will be collected and deposited into account 426620 01.

The City of Syracuse shall discharge all quarters due at the time of closing for the current year's tax. The pro-ration shall be determined by the Commissioner of Finance. This bid is contingent upon the City discharging miscellaneous and any other charges not presently a lien against the said premises.

Sincerely,

Matthew D. Oja
Commissioner

Department of Assessment
233 E. Washington St
City Hall, Room 130
Syracuse, N.Y. 13202

Office 315 448 8270
Fax 315 448 8190

assessment@syrgov.net

Ordinance No. 2022

ORDINANCE AUTHORIZING SALE OF ALL THE RIGHT, TITLE AND INTEREST OF THE CITY OF SYRACUSE IN AND TO 125 JOHN STREET FOR A TOTAL OF $151.00

WHEREAS, the Commissioner of Assessment hereby requests an ordinance authorizing the sale of all the right, title and interest of the City of Syracuse in and to the premises known as 125 John Street, being Lot 109, Block 119, Tract J & G Sub, Section 009, Block -17, Lot -51.0 (009.-17-51.0), Property No. 0345001100, 33 x 107.25 Wood House & Garage to Greater Syracuse Property Development Corporation for a total of $151.00; NOW, THEREFORE,

BE IT ORDAINED, subject to the approval of the Mayor, that upon payment to the Commissioner of Finance of the sum of $1.00 by Greater Syracuse Property Development Corporation, the said Commissioner of Finance be and he hereby is authorized to apply the sum of $1.00 toward the payment of delinquent taxes, exclusive of fees and penalties, to cancel and discharge said delinquency, and to issue his receipts and discharges thereof, charging the uncollected taxes to account #269404.01; the City of Syracuse to pay all quarters due at the date of closing, for the current year's tax, said share of pro-rated tax to be determined by the Commissioner of Finance; this bid is contingent upon the City of Syracuse discharging any miscellaneous charges not presently a lien against the said premises; and the Mayor is hereby authorized and empowered to make, execute and deliver a deed of the City's right, title and interest in and to said premises to Greater Syracuse Property Development Corporation, said deed to be approved as to manner, form and execution by the Corporation Counsel.

44

DEPARTMENT OF ASSESSMENT

CITY OF SYRACUSE, MAYOR BEN WALSH

March 21, 2022

Matthew D. Oja
Commissioner

Ann E. Gallagher
First Deputy Commissioner
Director of Operations

City Clerk Patricia K. McBride
230 City Hall
Syracuse, New York 13202

Attn: Members of the Common Council

Dear City Clerk McBride:

RE: REQUEST FOR ORDINANCE TO AUTHORIZE SALE OF ALL THE RIGHT, TITLE AND INTEREST OF THE CITY OF SYRACUSE IN AND TO THE PREMISES KNOWN AS: 125 JOHN ST. TO GREATER SYRACUSE PROPERTY DEVELOPMENT CORPORATION FOR A TOTAL OF $151.

This Department requests an ordinance to authorize sale of all the right, title and interest of the City of Syracuse in and to the premises known as:

125 John St.
Lot 109 Bl 119 Tr J&G Sub
009.-17-51.0
Property #: 0345001100
33x107.25 Whxgar
Purchaser: GREATER SYRACUSE PROPERTY DEVELOPMENT CORPORATION.

The Commissioner of Finance shall apply $1.00 of the purchase price by the proposed purchaser toward the payment of the delinquent taxes, excluding fees and penalties. Said Commissioner shall determine the amount, issue his warrant, cancel and discharges. The allowance for uncollected taxes shall be charged to 269404 01. A fee of $150 for title work will be collected and deposited into account 426620 01.

The City of Syracuse shall discharge all quarters due at the time of closing for the current year's tax. The pro-ration shall be determined by the Commissioner of Finance. This bid is contingent upon the City discharging miscellaneous and any other charges not presently a lien against the said premises.

Sincerely,

Matthew D. Oja
Commissioner

Department of Assessment
233 E. Washington St
City Hall, Room 130
Syracuse, N.Y. 13202

Office 315 448 8270
Fax 315 448 8190

assessment@syrgov.net

Ordinance No. 2022

ORDINANCE AUTHORIZING SALE OF ALL THE RIGHT, TITLE AND INTEREST OF THE CITY OF SYRACUSE IN AND TO 148 JOHN STREET FOR A TOTAL OF $151.00

WHEREAS, the Commissioner of Assessment hereby requests an ordinance authorizing the sale of all the right, title and interest of the City of Syracuse in and to the premises known as 148 John Street, being Lot 55, Block 120, Tract J & G Sub, Section 009, Block -25, Lot -02.0 (009.-25-02.0), Property No. 0345004800, 33 x 107.25 Wood House to Greater Syracuse Property Development Corporation for a total of $151.00; NOW, THEREFORE,

BE IT ORDAINED, subject to the approval of the Mayor, that upon payment to the Commissioner of Finance of the sum of $1.00 plus $150.00 for title work for a total of $151.00 by Greater Syracuse Property Development Corporation, the said Commissioner of Finance be and he hereby is authorized to apply the sum of $1.00 toward the payment of delinquent taxes, exclusive of fees and penalties, to cancel and discharge said delinquency, and to issue his receipts and discharges thereof, charging the uncollected taxes to account #269404.01 and the cost of title fee of $150.00 deposited to account #426620.01; the City of Syracuse to pay all quarters due at the date of closing, for the current year's tax, said share of pro-rated tax to be determined by the Commissioner of Finance; this bid is contingent upon the City of Syracuse discharging any miscellaneous charges not presently a lien against the said premises; and the Mayor is hereby authorized and empowered to make, execute and deliver a deed of the City's right, title and interest in and to said premises to Greater Syracuse Property Development Corporation, said deed to be approved as to manner, form and execution by the Corporation Counsel.

15

DEPARTMENT OF ASSESSMENT

CITY OF SYRACUSE, MAYOR BEN WALSH

March 21, 2022

Matthew D. Oja
Commissioner

Ann E. Gallagher
First Deputy Commissioner
Director of Operations

City Clerk Patricia K. McBride
230 City Hall
Syracuse, New York 13202

Attn: Members of the Common Council

Dear City Clerk McBride:

RE: REQUEST FOR ORDINANCE TO AUTHORIZE SALE OF ALL THE RIGHT, TITLE AND INTEREST OF THE CITY OF SYRACUSE IN AND TO THE PREMISES KNOWN AS: 148 JOHN ST. TO GREATER SYRACUSE PROPERTY DEVELOPMENT CORPORATION FOR A TOTAL OF $151.

This Department requests an ordinance to authorize sale of all the right, title and interest of the City of Syracuse in and to the premises known as:

148 John St.
Lot 55 Bl 120 Tr J&G Sub
009.-25-02.0
Property #: 0345004800
33x107.25 Wh
Purchaser: GREATER SYRACUSE PROPERTY DEVELOPMENT CORPORATION.

The Commissioner of Finance shall apply $1.00 of the purchase price by the proposed purchaser toward the payment of the delinquent taxes, excluding fees and penalties. Said Commissioner shall determine the amount, issue his warrant, cancel and discharges. The allowance for uncollected taxes shall be charged to 269404 01. A fee of $150 for title work will be collected and deposited into account 426620 01.

The City of Syracuse shall discharge all quarters due at the time of closing for the current year's tax. The pro-ration shall be determined by the Commissioner of Finance. This bid is contingent upon the City discharging miscellaneous and any other charges not presently a lien against the said premises.

Sincerely,

Matthew D. Oja
Commissioner

Department of Assessment
233 E. Washington St
City Hall, Room 130
Syracuse, N.Y. 13202

Office 315 448 8270
Fax 315 448 8190

assessment@syrgov.net

Ordinance No. 2022

ORDINANCE AUTHORIZING SALE OF ALL THE RIGHT, TITLE AND INTEREST OF THE CITY OF SYRACUSE IN AND TO 102 LANDON AVENUE FOR A TOTAL OF $151.00

WHEREAS, the Commissioner of Assessment hereby requests an ordinance authorizing the sale of all the right, title and interest of the City of Syracuse in and to the premises known as 102 Landon Avenue, being Lot P 1 & 2, Block 1012, Tract Furman, Section 084, Block -01, Lot -13.0 (084.-01-13.0), Property No. 1850000500, 40 x 78.50 Wood House & Garage to Greater Syracuse Property Development Corporation for a total of $151.00; NOW, THEREFORE,

BE IT ORDAINED, subject to the approval of the Mayor, that upon payment to the Commissioner of Finance of the sum of $1.00 plus $150.00 for title work for a total of $151.00 by Greater Syracuse Property Development Corporation, the said Commissioner of Finance be and he hereby is authorized to apply the sum of $1.00 toward the payment of delinquent taxes, exclusive of fees and penalties, to cancel and discharge said delinquency, and to issue his receipts and discharges thereof, charging the uncollected taxes to account #269404.01 and the cost of title fee of $150.00 deposited to account #426620.01; the City of Syracuse to pay all quarters due at the date of closing, for the current year's tax, said share of pro-rated tax to be determined by the Commissioner of Finance; this bid is contingent upon the City of Syracuse discharging any miscellaneous charges not presently a lien against the said premises; and the Mayor is hereby authorized and empowered to make, execute and deliver a deed of the City's right, title and interest in and to said premises to Greater Syracuse Property Development Corporation, said deed to be approved as to manner, form and execution by the Corporation Counsel.

46

DEPARTMENT OF ASSESSMENT

CITY OF SYRACUSE, MAYOR BEN WALSH

March 21, 2022

Matthew D. Oja
Commissioner

Ann E. Gallagher
First Deputy Commissioner
Director of Operations

City Clerk Patricia K. McBride
230 City Hall
Syracuse, New York 13202

Attn: Members of the Common Council

Dear City Clerk McBride:

RE: REQUEST FOR ORDINANCE TO AUTHORIZE SALE OF ALL THE RIGHT, TITLE AND INTEREST OF THE CITY OF SYRACUSE IN AND TO THE PREMISES KNOWN AS: 102 LANDON AVE. TO GREATER SYRACUSE PROPERTY DEVELOPMENT CORPORATION FOR A TOTAL OF $151.

This Department requests an ordinance to authorize sale of all the right, title and interest of the City of Syracuse in and to the premises known as:

102 Landon Ave.
Lot P1&2 Bl 1012 Tr Furman
084.-01-13.0
Property #: 1850000500
40x78.50 Whxgar
Purchaser: GREATER SYRACUSE PROPERTY DEVELOPMENT CORPORATION.

The Commissioner of Finance shall apply $1.00 of the purchase price by the proposed purchaser toward the payment of the delinquent taxes, excluding fees and penalties. Said Commissioner shall determine the amount, issue his warrant, cancel and discharges. The allowance for uncollected taxes shall be charged to 269404 01. A fee of $150 for title work will be collected and deposited into account 426620 01.

The City of Syracuse shall discharge all quarters due at the time of closing for the current year's tax. The pro-ration shall be determined by the Commissioner of Finance. This bid is contingent upon the City discharging miscellaneous and any other charges not presently a lien against the said premises.

Sincerely,

Matthew D. Oja
Commissioner

Department of Assessment
233 E. Washington St
City Hall, Room 130
Syracuse, N.Y. 13202

Office 315 448 8270
Fax 315 448 8190

assessment@syrgov.net

Ordinance No. 2022

ORDINANCE AUTHORIZING SALE OF ALL THE RIGHT, TITLE AND INTEREST OF THE CITY OF SYRACUSE IN AND TO 2229 LODI STREET & DANFORTH STREET FOR A TOTAL OF $151.00

WHEREAS, the Commissioner of Assessment hereby requests an ordinance authorizing the sale of all the right, title and interest of the City of Syracuse in and to the premises known as 2229 Lodi Street & Danforth Street, being Lot 1, Sub P 1, Block 80, Section 007, Block -17, Lot -01.0 (007.-17-01.0), Property No. 0253104000, 24 x 47.50 Wood House to Greater Syracuse Property Development Corporation for a total of $151.00; NOW, THEREFORE,

BE IT ORDAINED, subject to the approval of the Mayor, that upon payment to the Commissioner of Finance of the sum of $1.00 plus $150.00 for title work for a total of $151.00 by Greater Syracuse Property Development Corporation, the said Commissioner of Finance be and he hereby is authorized to apply the sum of $1.00 toward the payment of delinquent taxes, exclusive of fees and penalties, to cancel and discharge said delinquency, and to issue his receipts and discharges thereof, charging the uncollected taxes to account #269404.01 and the cost of title fee of $150.00 deposited to account #426620.01; the City of Syracuse to pay all quarters due at the date of closing, for the current year's tax, said share of pro-rated tax to be determined by the Commissioner of Finance; this bid is contingent upon the City of Syracuse discharging any miscellaneous charges not presently a lien against the said premises; and the Mayor is hereby authorized and empowered to make, execute and deliver a deed of the City's right, title and interest in and to said premises to Greater Syracuse Property Development Corporation, said deed to be approved as to manner, form and execution by the Corporation Counsel.

DEPARTMENT OF ASSESSMENT

CITY OF SYRACUSE, MAYOR BEN WALSH

March 21, 2022

Matthew D. Oja
Commissioner

Ann E. Gallagher
First Deputy Commissioner
Director of Operations

City Clerk Patricia K. McBride
230 City Hall
Syracuse, New York 13202

Attn: Members of the Common Council

Dear City Clerk McBride:

RE: REQUEST FOR ORDINANCE TO AUTHORIZE SALE OF ALL THE RIGHT, TITLE AND INTEREST OF THE CITY OF SYRACUSE IN AND TO THE PREMISES KNOWN AS: 2229 LODI ST. & DANFORTH ST. TO GREATER SYRACUSE PROPERTY DEVELOPMENT CORPORATION FOR A TOTAL OF $151.

This Department requests an ordinance to authorize sale of all the right, title and interest of the City of Syracuse in and to the premises known as:

2229 Lodi St. & Danforth St.
Lot 1 Sub P1 Bl 80
007.-17-01.0
Property #: 0253104000
24x47.50 Wh
Purchaser: GREATER SYRACUSE PROPERTY DEVELOPMENT CORPORATION.

The Commissioner of Finance shall apply $1.00 of the purchase price by the proposed purchaser toward the payment of the delinquent taxes, excluding fees and penalties. Said Commissioner shall determine the amount, issue his warrant, cancel and discharges. The allowance for uncollected taxes shall be charged to 269404 01. A fee of $150 for title work will be collected and deposited into account 426620 01.

The City of Syracuse shall discharge all quarters due at the time of closing for the current year's tax. The pro-ration shall be determined by the Commissioner of Finance. This bid is contingent upon the City discharging miscellaneous and any other charges not presently a lien against the said premises.

Sincerely,

Matthew D. Oja
Commissioner

Department of Assessment
233 E. Washington St
City Hall, Room 130
Syracuse, N.Y. 13202

Office 315 448 8270
Fax 315 448 8190

assessment@syrgov.net

Ordinance No. 2022

ORDINANCE AUTHORIZING SALE OF ALL THE RIGHT, TITLE AND INTEREST OF THE CITY OF SYRACUSE IN AND TO 2513 LODI STREET FOR A TOTAL OF $151.00

WHEREAS, the Commissioner of Assessment hereby requests an ordinance authorizing the sale of all the right, title and interest of the City of Syracuse in and to the premises known as 2513 Lodi Street, being Lot 2, Block 46, Section 002, Block -26, Lot -05.0 (002.-26-05.0), Property No. 0253107800, 24.50 x 105 Wood House to Greater Syracuse Property Development Corporation for a total of $151.00; NOW, THEREFORE,

BE IT ORDAINED, subject to the approval of the Mayor, that upon payment to the Commissioner of Finance of the sum of $1.00 plus $150.00 for title work for a total of $151.00 by Greater Syracuse Property Development Corporation, the said Commissioner of Finance be and he hereby is authorized to apply the sum of $1.00 toward the payment of delinquent taxes, exclusive of fees and penalties, to cancel and discharge said delinquency, and to issue his receipts and discharges thereof, charging the uncollected taxes to account #269404.01 and the cost of title fee of $150.00 deposited to account #426620.01; the City of Syracuse to pay all quarters due at the date of closing, for the current year's tax, said share of pro-rated tax to be determined by the Commissioner of Finance; this bid is contingent upon the City of Syracuse discharging any miscellaneous charges not presently a lien against the said premises; and the Mayor is hereby authorized and empowered to make, execute and deliver a deed of the City's right, title and interest in and to said premises to Greater Syracuse Property Development Corporation, said deed to be approved as to manner, form and execution by the Corporation Counsel.

48

DEPARTMENT OF ASSESSMENT

CITY OF SYRACUSE, MAYOR BEN WALSH

March 21, 2022

Matthew D. Oja
Commissioner

Ann E. Gallagher
First Deputy Commissioner
Director of Operations

City Clerk Patricia K. McBride
230 City Hall
Syracuse, New York 13202

Attn: Members of the Common Council

Dear City Clerk McBride:

RE: REQUEST FOR ORDINANCE TO AUTHORIZE SALE OF ALL THE RIGHT, TITLE AND INTEREST OF THE CITY OF SYRACUSE IN AND TO THE PREMISES KNOWN AS: 2513 LODI ST. TO GREATER SYRACUSE PROPERTY DEVELOPMENT CORPORATION FOR A TOTAL OF $151.

This Department requests an ordinance to authorize sale of all the right, title and interest of the City of Syracuse in and to the premises known as:

2513 Lodi St.
Lot P2 Bl 46
002.-26-05.0
Property #: 0253107800
24.50x105 Wh
Purchaser: GREATER SYRACUSE PROPERTY DEVELOPMENT CORPORATION.

The Commissioner of Finance shall apply $1.00 of the purchase price by the proposed purchaser toward the payment of the delinquent taxes, excluding fees and penalties. Said Commissioner shall determine the amount, issue his warrant, cancel and discharges. The allowance for uncollected taxes shall be charged to 269404 01. A fee of $150 for title work will be collected and deposited into account 426620 01.

The City of Syracuse shall discharge all quarters due at the time of closing for the current year's tax. The pro-ration shall be determined by the Commissioner of Finance. This bid is contingent upon the City discharging miscellaneous and any other charges not presently a lien against the said premises.

Sincerely,

Matthew D. Oja
Commissioner

Department of Assessment
233 E. Washington St
City Hall, Room 130
Syracuse, N.Y. 13202

Office 315 448 8270
Fax 315 448 8190

assessment@syrgov.net

Ordinance No. 2022

ORDINANCE AUTHORIZING SALE OF ALL THE RIGHT, TITLE AND INTEREST OF THE CITY OF SYRACUSE IN AND TO 1105 NORTH MCBRIDE STREET FOR A TOTAL OF $151.00

WHEREAS, the Commissioner of Assessment hereby requests an ordinance authorizing the sale of all the right, title and interest of the City of Syracuse in and to the premises known as 1105 North McBride Street, being Block 132, Section 008, Block -04, Lot -13.0 (008.-04-13.0), Property No. 0358003300, 26 x 66 Wood House to Greater Syracuse Property Development Corporation for a total of $151.00; NOW, THEREFORE,

BE IT ORDAINED, subject to the approval of the Mayor, that upon payment to the Commissioner of Finance of the sum of $1.00 plus $150.00 for title work for a total of $151.00 by Greater Syracuse Property Development Corporation, the said Commissioner of Finance be and he hereby is authorized to apply the sum of $1.00 toward the payment of delinquent taxes, exclusive of fees and penalties, to cancel and discharge said delinquency, and to issue his receipts and discharges thereof, charging the uncollected taxes to account #269404.01 and the cost of title fee of $150.00 deposited to account #426620.01; the City of Syracuse to pay all quarters due at the date of closing, for the current year's tax, said share of pro-rated tax to be determined by the Commissioner of Finance; this bid is contingent upon the City of Syracuse discharging any miscellaneous charges not presently a lien against the said premises; and the Mayor is hereby authorized and empowered to make, execute and deliver a deed of the City's right, title and interest in and to said premises to Greater Syracuse Property Development Corporation, said deed to be approved as to manner, form and execution by the Corporation Counsel.

49

DEPARTMENT OF ASSESSMENT

CITY OF SYRACUSE, MAYOR BEN WALSH

March 21, 2022

Matthew D. Oja
Commissioner

Ann E. Gallagher
First Deputy Commissioner
Director of Operations

City Clerk Patricia K. McBride
230 City Hall
Syracuse, New York 13202

Attn: Members of the Common Council

Dear City Clerk McBride:

RE: REQUEST FOR ORDINANCE TO AUTHORIZE SALE OF ALL THE RIGHT, TITLE AND INTEREST OF THE CITY OF SYRACUSE IN AND TO THE PREMISES KNOWN AS: 1105 MCBRIDE ST. N. TO GREATER SYRACUSE PROPERTY DEVELOPMENT CORPORATION FOR A TOTAL OF $151.

This Department requests an ordinance to authorize sale of all the right, title and interest of the City of Syracuse in and to the premises known as:

1105 McBride St. N.
Bl 132
008.-04-13.0
Property #: 0358003300
26x66 Wh
Purchaser: GREATER SYRACUSE PROPERTY DEVELOPMENT CORPORATION.

The Commissioner of Finance shall apply $1.00 of the purchase price by the proposed purchaser toward the payment of the delinquent taxes, excluding fees and penalties. Said Commissioner shall determine the amount, issue his warrant, cancel and discharges. The allowance for uncollected taxes shall be charged to 269404 01. A fee of $150 for title work will be collected and deposited into account 426620 01.

The City of Syracuse shall discharge all quarters due at the time of closing for the current year's tax. The pro-ration shall be determined by the Commissioner of Finance. This bid is contingent upon the City discharging miscellaneous and any other charges not presently a lien against the said premises.

Sincerely,

Matthew D. Oja
Commissioner

Department of Assessment
233 E. Washington St
City Hall, Room 130
Syracuse, N.Y. 13202

Office 315 448 8270
Fax 315 448 8190

assessment@syrgov.net

Ordinance No. 2022

ORDINANCE AUTHORIZING SALE OF ALL THE RIGHT, TITLE AND INTEREST OF THE CITY OF SYRACUSE IN AND TO 118-120 MCCLURE AVENUE FOR A TOTAL OF $151.00

WHEREAS, the Commissioner of Assessment hereby requests an ordinance authorizing the sale of all the right, title and interest of the City of Syracuse in and to the premises known as 118-120 McClure Avenue, being Lot 8, Tract Brown, Section 077, Block -15, Lot -03.0 (077.-15-03.0), Property No. 1958101200, 36.38 x 132 Wood House to Greater Syracuse Property Development Corporation for a total of $151.00; NOW, THEREFORE,

BE IT ORDAINED, subject to the approval of the Mayor, that upon payment to the Commissioner of Finance of the sum of $1.00 plus $150.00 for title work for a total of $151.00 by Greater Syracuse Property Development Corporation, the said Commissioner of Finance be and he hereby is authorized to apply the sum of $1.00 toward the payment of delinquent taxes, exclusive of fees and penalties, to cancel and discharge said delinquency, and to issue his receipts and discharges thereof, charging the uncollected taxes to account #269404.01 and the cost of title fee of $150.00 deposited to account #426620.01; the City of Syracuse to pay all quarters due at the date of closing, for the current year's tax, said share of pro-rated tax to be determined by the Commissioner of Finance; this bid is contingent upon the City of Syracuse discharging any miscellaneous charges not presently a lien against the said premises; and the Mayor is hereby authorized and empowered to make, execute and deliver a deed of the City's right, title and interest in and to said premises to Greater Syracuse Property Development Corporation, said deed to be approved as to manner, form and execution by the Corporation Counsel.

50

DEPARTMENT OF ASSESSMENT

CITY OF SYRACUSE, MAYOR BEN WALSH

March 21, 2022

Matthew D. Oja
Commissioner

Ann E. Gallagher
First Deputy Commissioner
Director of Operations

City Clerk Patricia K. McBride
230 City Hall
Syracuse, New York 13202

Attn: Members of the Common Council

Dear City Clerk McBride:

RE: REQUEST FOR ORDINANCE TO AUTHORIZE SALE OF ALL THE RIGHT, TITLE AND INTEREST OF THE CITY OF SYRACUSE IN AND TO THE PREMISES KNOWN AS: 118-20 MCCLURE AVE. TO GREATER SYRACUSE PROPERTY DEVELOPMENT CORPORATION FOR A TOTAL OF $151.

This Department requests an ordinance to authorize sale of all the right, title and interest of the City of Syracuse in and to the premises known as:

118-20 McClure Ave.
Lot 8 Tr Brown
077.-15-03.0
Property #: 1958101200
36.38x132 Wh Fp46
Purchaser: GREATER SYRACUSE PROPERTY DEVELOPMENT CORPORATION.

The Commissioner of Finance shall apply $1.00 of the purchase price by the proposed purchaser toward the payment of the delinquent taxes, excluding fees and penalties. Said Commissioner shall determine the amount, issue his warrant, cancel and discharges. The allowance for uncollected taxes shall be charged to 269404 01. A fee of $150 for title work will be collected and deposited into account 426620 01.

The City of Syracuse shall discharge all quarters due at the time of closing for the current year's tax. The pro-ration shall be determined by the Commissioner of Finance. This bid is contingent upon the City discharging miscellaneous and any other charges not presently a lien against the said premises.

Sincerely,

Matthew D. Oja
Commissioner

Department of Assessment
233 E. Washington St
City Hall, Room 130
Syracuse, N.Y. 13202

Office 315 448 8270
Fax 315 448 8190

assessment@syrgov.net

Ordinance No. 2022

ORDINANCE AUTHORIZING SALE OF ALL THE RIGHT, TITLE AND INTEREST OF THE CITY OF SYRACUSE IN AND TO 105 MURRAY AVENUE FOR A TOTAL OF $151.00

WHEREAS, the Commissioner of Assessment hereby requests an ordinance authorizing the sale of all the right, title and interest of the City of Syracuse in and to the premises known as 105 Murray Avenue, being Lot 12, Block 134, Tract Murray, Section 003, Block -16, Lot -27.0 (003.-16-27.0), Property No. 0163000300, 41 x 123 Wood House & Garage to Greater Syracuse Property Development Corporation for a total of $151.00; NOW, THEREFORE,

BE IT ORDAINED, subject to the approval of the Mayor, that upon payment to the Commissioner of Finance of the sum of $1.00 by Greater Syracuse Property Development Corporation, the said Commissioner of Finance be and he hereby is authorized to apply the sum of $1.00 toward the payment of delinquent taxes, exclusive of fees and penalties, to cancel and discharge said delinquency, and to issue his receipts and discharges thereof, charging the uncollected taxes to account #269404.01; the City of Syracuse to pay all quarters due at the date of closing, for the current year's tax, said share of pro-rated tax to be determined by the Commissioner of Finance; this bid is contingent upon the City of Syracuse discharging any miscellaneous charges not presently a lien against the said premises; and the Mayor is hereby authorized and empowered to make, execute and deliver a deed of the City's right, title and interest in and to said premises to Greater Syracuse Property Development Corporation, said deed to be approved as to manner, form and execution by the Corporation Counsel.

DEPARTMENT OF ASSESSMENT

CITY OF SYRACUSE, MAYOR BEN WALSH

March 21, 2022

Matthew D. Oja
Commissioner

Ann E. Gallagher
First Deputy Commissioner
Director of Operations

City Clerk Patricia K. McBride
230 City Hall
Syracuse, New York 13202

Attn: Members of the Common Council

Dear City Clerk McBride:

RE: REQUEST FOR ORDINANCE TO AUTHORIZE SALE OF ALL THE RIGHT, TITLE AND INTEREST OF THE CITY OF SYRACUSE IN AND TO THE PREMISES KNOWN AS: 105 MURRAY AVE. TO GREATER SYRACUSE PROPERTY DEVELOPMENT CORPORATION FOR A TOTAL OF $151.

This Department requests an ordinance to authorize sale of all the right, title and interest of the City of Syracuse in and to the premises known as:

105 Murray Ave.
Lot 12 Bl 134 Tr Murray
003.-16-27.0
Property #: 0163000300
41x123 Whxgar
Purchaser: GREATER SYRACUSE PROPERTY DEVELOPMENT CORPORATION.

The Commissioner of Finance shall apply $1.00 of the purchase price by the proposed purchaser toward the payment of the delinquent taxes, excluding fees and penalties. Said Commissioner shall determine the amount, issue his warrant, cancel and discharges. The allowance for uncollected taxes shall be charged to 269404 01. A fee of $150 for title work will be collected and deposited into account 426620 01.

The City of Syracuse shall discharge all quarters due at the time of closing for the current year's tax. The pro-ration shall be determined by the Commissioner of Finance. This bid is contingent upon the City discharging miscellaneous and any other charges not presently a lien against the said premises.

Sincerely,

Matthew D. Oja
Commissioner

Department of Assessment
233 E. Washington St
City Hall, Room 130
Syracuse, N.Y. 13202

Office 315 448 8270
Fax 315 448 8190

assessment@syrgov.net

Ordinance No. 2022

ORDINANCE AUTHORIZING SALE OF ALL THE RIGHT, TITLE AND INTEREST OF THE CITY OF SYRACUSE IN AND TO 605-607 ONEIDA STREET FOR A TOTAL OF $151.00

WHEREAS, the Commissioner of Assessment hereby requests an ordinance authorizing the sale of all the right, title and interest of the City of Syracuse in and to the premises known as 605-607 Oneida Street, being Lot 29, Block D, Tract J Walch Map, Section 094, Block -04, Lot -18.0 (094.-04-18.0), Property No. 1867002000, 40 x 120 Vacant Lot to Greater Syracuse Property Development Corporation for a total of $151.00; NOW, THEREFORE,

BE IT ORDAINED, subject to the approval of the Mayor, that upon payment to the Commissioner of Finance of the sum of $1.00 by Greater Syracuse Property Development Corporation, the said Commissioner of Finance be and he hereby is authorized to apply the sum of $1.00 toward the payment of delinquent taxes, exclusive of fees and penalties, to cancel and discharge said delinquency, and to issue his receipts and discharges thereof, charging the uncollected taxes to account #269404.01; the City of Syracuse to pay all quarters due at the date of closing, for the current year's tax, said share of pro-rated tax to be determined by the Commissioner of Finance; this bid is contingent upon the City of Syracuse discharging any miscellaneous charges not presently a lien against the said premises; and the Mayor is hereby authorized and empowered to make, execute and deliver a deed of the City's right, title and interest in and to said premises to Greater Syracuse Property Development Corporation, said deed to be approved as to manner, form and execution by the Corporation Counsel.

57

DEPARTMENT OF ASSESSMENT

CITY OF SYRACUSE, MAYOR BEN WALSH

March 29, 2022

Matthew D. Oja
Commissioner

Ann E. Gallagher
First Deputy Commissioner
Director of Operations

City Clerk Patricia K. McBride
230 City Hall
Syracuse, New York 13202

Attn: Members of the Common Council

Dear City Clerk McBride:

RE: REQUEST FOR ORDINANCE TO AUTHORIZE SALE OF ALL THE RIGHT, TITLE AND INTEREST OF THE CITY OF SYRACUSE IN AND TO THE PREMISES KNOWN AS: 605-07 ONEIDA ST. TO GREATER SYRACUSE PROPERTY DEVELOPMENT CORPORATION FOR A TOTAL OF $151.

This Department requests an ordinance to authorize sale of all the right, title and interest of the City of Syracuse in and to the premises known as:

605-07 Oneida St.
Lot29 Bl D Tr JWalch Map
094.-04-18.0
Property #: 1867002000
40x120 Vac
Purchaser: GREATER SYRACUSE PROPERTY DEVELOPMENT CORPORATION.

The Commissioner of Finance shall apply $1.00 of the purchase price by the proposed purchaser toward the payment of the delinquent taxes, excluding fees and penalties. Said Commissioner shall determine the amount, issue his warrant, cancel and discharges. The allowance for uncollected taxes shall be charged to 269404 01. A fee of $150 for title work will be collected and deposited into account 426620 01.

The City of Syracuse shall discharge all quarters due at the time of closing for the current year's tax. The pro-ration shall be determined by the Commissioner of Finance. This bid is contingent upon the City discharging miscellaneous and any other charges not presently a lien against the said premises.

Sincerely,

Matthew D. Oja
Commissioner

Department of Assessment
233 E. Washington St
City Hall, Room 130
Syracuse, N.Y. 13202

Office 315 448 8270
Fax 315 448 8190

assessment@syrgov.net

GROWTH. DIVERSITY. OPPORTUNITY FOR ALL

38

Ordinance No. 2022

ORDINANCE AUTHORIZING SALE OF ALL THE RIGHT, TITLE AND INTEREST OF THE CITY OF SYRACUSE IN AND TO 215 PATTISON STREET FOR A TOTAL OF $151.00

WHEREAS, the Commissioner of Assessment hereby requests an ordinance authorizing the sale of all the right, title and interest of the City of Syracuse in and to the premises known as 215 Pattison Street, being Lot 11, P 1 obl 563, Tract Colvin Fa M Amd, Section 019, Block -22, Lot - 13.0 (019.-22-13.0), Property No. 0668002400, 37.70 x 80. L 33 x 52 Wood House & Garage to Greater Syracuse Property Development Corporation for a total of $151.00; NOW, THEREFORE,

BE IT ORDAINED, subject to the approval of the Mayor, that upon payment to the Commissioner of Finance of the sum of $1.00 by Greater Syracuse Property Development Corporation, the said Commissioner of Finance be and he hereby is authorized to apply the sum of $1.00 toward the payment of delinquent taxes, exclusive of fees and penalties, to cancel and discharge said delinquency, and to issue his receipts and discharges thereof, charging the uncollected taxes to account #269404.01; the City of Syracuse to pay all quarters due at the date of closing, for the current year's tax, said share of pro-rated tax to be determined by the Commissioner of Finance; this bid is contingent upon the City of Syracuse discharging any miscellaneous charges not presently a lien against the said premises; and the Mayor is hereby authorized and empowered to make, execute and deliver a deed of the City's right, title and interest in and to said premises to Greater Syracuse Property Development Corporation, said deed to be approved as to manner, form and execution by the Corporation Counsel.

DEPARTMENT OF ASSESSMENT

CITY OF SYRACUSE, MAYOR BEN WALSH

March 29, 2022

Matthew D. Oja
Commissioner

Ann E. Gallagher
First Deputy Commissioner
Director of Operations

City Clerk Patricia K. McBride
230 City Hall
Syracuse, New York 13202

Attn: Members of the Common Council

Dear City Clerk McBride:

RE: REQUEST FOR ORDINANCE TO AUTHORIZE SALE OF ALL THE RIGHT, TITLE AND INTEREST OF THE CITY OF SYRACUSE IN AND TO THE PREMISES KNOWN AS: 215 PATTISON ST. TO GREATER SYRACUSE PROPERTY DEVELOPMENT CORPORATION FOR A TOTAL OF $151.

This Department requests an ordinance to authorize sale of all the right, title and interest of the City of Syracuse in and to the premises known as:

215 Pattison St.
Lot1 1p1obl563tr Colvin Fa M Amd
019.-22-13.0
Property #: 0668002400
37.7ox80.L33X52whxgar
Purchaser: GREATER SYRACUSE PROPERTY DEVELOPMENT CORPORATION.

The Commissioner of Finance shall apply $1.00 of the purchase price by the proposed purchaser toward the payment of the delinquent taxes, excluding fees and penalties. Said Commissioner shall determine the amount, issue his warrant, cancel and discharges. The allowance for uncollected taxes shall be charged to 269404 01. A fee of $150 for title work will be collected and deposited into account 426620 01.

The City of Syracuse shall discharge all quarters due at the time of closing for the current year's tax. The pro-ration shall be determined by the Commissioner of Finance. This bid is contingent upon the City discharging miscellaneous and any other charges not presently a lien against the said premises.

Sincerely,

Matthew D. Oja
Commissioner

Department of Assessment
233 E. Washington St
City Hall, Room 130
Syracuse, N.Y. 13202

Office 315 448 8270
Fax 315 448 8190

assessment@syrgov.net

Ordinance No. 2022

ORDINANCE AUTHORIZING SALE OF ALL THE RIGHT, TITLE AND INTEREST OF THE CITY OF SYRACUSE IN AND TO 1426 NORTH STATE STREET & DANFORTH STREET FOR A TOTAL OF $151.00

WHEREAS, the Commissioner of Assessment hereby requests an ordinance authorizing the sale of all the right, title and interest of the City of Syracuse in and to the premises known as 1426 North State Street & Danforth Street, being Lot 1 Sub P 1, Block 80, Section 007, Block -17, Lot -28.0 (007.-17-28.0), Property No. 0286107000, 29.17 x 43.44 Wood House to Greater Syracuse Property Development Corporation for a total of $151.00; NOW, THEREFORE,

BE IT ORDAINED, subject to the approval of the Mayor, that upon payment to the Commissioner of Finance of the sum of $1.00 plus $150.00 for title work for a total of $151.00 by Greater Syracuse Property Development Corporation, the said Commissioner of Finance be and he hereby is authorized to apply the sum of $1.00 toward the payment of delinquent taxes, exclusive of fees and penalties, to cancel and discharge said delinquency, and to issue his receipts and discharges thereof, charging the uncollected taxes to account #269404.01 and the cost of title fee of $150.00 deposited to account #426620.01; the City of Syracuse to pay all quarters due at the date of closing, for the current year's tax, said share of pro-rated tax to be determined by the Commissioner of Finance; this bid is contingent upon the City of Syracuse discharging any miscellaneous charges not presently a lien against the said premises; and the Mayor is hereby authorized and empowered to make, execute and deliver a deed of the City's right, title and interest in and to said premises to Greater Syracuse Property Development Corporation, said deed to be approved as to manner, form and execution by the Corporation Counsel.

54

DEPARTMENT OF ASSESSMENT

CITY OF SYRACUSE, MAYOR BEN WALSH

March 21, 2022

Matthew D. Oja
Commissioner

Ann E. Gallagher
First Deputy Commissioner
Director of Operations

City Clerk Patricia K. McBride
230 City Hall
Syracuse, New York 13202

Attn: Members of the Common Council

Dear City Clerk McBride:

RE: REQUEST FOR ORDINANCE TO AUTHORIZE SALE OF ALL THE RIGHT, TITLE AND INTEREST OF THE CITY OF SYRACUSE IN AND TO THE PREMISES KNOWN AS: 1426 STATE ST N. & DANFORTH ST. TO GREATER SYRACUSE PROPERTY DEVELOPMENT CORPORATION FOR A TOTAL OF $151.

This Department requests an ordinance to authorize sale of all the right, title and interest of the City of Syracuse in and to the premises known as:

1426 State St N. & Danforth St.
Lot 1 Sub P 1 Bl 80
007.-17-28.0
Property #: 0286107000
29.17x43.44 Wh
Purchaser: GREATER SYRACUSE PROPERTY DEVELOPMENT CORPORATION.

The Commissioner of Finance shall apply $1.00 of the purchase price by the proposed purchaser toward the payment of the delinquent taxes, excluding fees and penalties. Said Commissioner shall determine the amount, issue his warrant, cancel and discharges. The allowance for uncollected taxes shall be charged to 269404 01. A fee of $150 for title work will be collected and deposited into account 426620 01.

The City of Syracuse shall discharge all quarters due at the time of closing for the current year's tax. The pro-ration shall be determined by the Commissioner of Finance. This bid is contingent upon the City discharging miscellaneous and any other charges not presently a lien against the said premises.

Sincerely,

Matthew D. Oja
Commissioner

Department of Assessment
233 E. Washington St
City Hall, Room 130
Syracuse, N.Y. 13202

Office 315 448 8270
Fax 315 448 8190

assessment@syrgov.net

GROWTH. DIVERSITY. OPPORTUNITY FOR ALL

40

55 ~~35~~ ~~38~~ ~~24~~ ~~28~~ ~~23~~

Ordinance No. 2022

BOND ORDINANCE OF THE CITY OF SYRACUSE AUTHORIZING THE ISSUANCE AND SALE OF BONDS IN THE AMOUNT OF THIRTY THOUSAND DOLLARS ($30,000.00) TO DEFRAY THE COST AND EXPENSE OF THE DEPARTMENT OF PUBLIC WORKS 2021/2022 RADAR SIGN PROGRAM

BE IT ORDAINED, by the Common Council of the City of Syracuse as follows:

Section 1. For the specific object or purpose of providing funds to defray the cost and expense of the 2021/2022 Department of Public Works Radar Sign Program which calls for the purchase and installation in School Zones of new stationary equipment, which shall include but not be limited to mobile speed trailers and variable message boards and stationary radar speed signs that will be utilized with existing School Zone beacons and posted speed reductions, at a cost not to exceed Thirty Thousand Dollars ($30,000.00), general obligation bonds of the City of Syracuse, to be of the terms, form and contents hereinafter provided for, are hereby authorized to be issued pursuant to the provisions of the Local Finance Law of the State of New York.

Section 2. Thirty Thousand Dollars ($30,000.00)) is estimated as the maximum cost of the specific object or purpose for which such bonds are to be issued.

Section 3. The plan for financing such specific object or purpose consists of the issuance and sale of bonds of the City of Syracuse in the principal sum of Thirty Thousand Dollars ($30,000.00), thereby providing such sum for all the maximum cost of such specific object or purpose.

Section 4. It is hereby determined that the specific object or purpose for which bonds are to be issued falls within subdivision 35 of paragraph (a) Section 11.00 of the Local Finance Law and the period of probable usefulness of such specific object or purpose is five (5) years.

Section 5. The Commissioner of Finance, not more than fifteen (15) days and not less than three (3) days before the sale of said bonds, shall file with the Comptroller of the State of New York a supplemental debt statement and file a duplicate thereof with the City Clerk in compliance with Section 109.00 of the Local Finance Law.

Section 6. Subject to the provisions of the Local Finance Law, the power to authorize the issuance of and to sell the bonds and bond anticipation notes in anticipation of the issuance and sale of the bonds herein authorized, including renewals of such notes, is hereby delegated to the Commissioner of Finance who is the chief fiscal officer of the City under the Local Finance Law. The Commissioner of Finance may sell such bonds at public or private sale, with or without bond insurance or other credit enhancement, at a discount or premium, at fixed or variable rates of interest or at no interest whatsoever, or as capital appreciation bonds, and with such amortization of principal as the Commissioner of Finance shall determine is most favorable to said City, and in compliance with any rules of the State Comptroller applicable thereto. Such notes shall be of such terms, form and contents, and shall be sold in such manner, as may be prescribed by said Commissioner of Finance, consistent with the provisions of the Local Finance Law. The Commissioner of Finance is hereby authorized to issue variable rate debt, acquire credit support, and enter into such agreements as said officer finds reasonable to facilitate the issuance, sale, resale and repurchase of such bonds, as authorized under Sections 54.90 and 168.00 of the Local Finance Law. Said bonds shall be signed in the name of the City by the original or facsimile signature of the Mayor and countersigned by the original or facsimile signature of the Commissioner of Finance and sealed with the original or facsimile corporate seal of the City, provided, however, that if the signatures of the Mayor and the Commissioner of Finance are each by facsimile signatures on any bond, such bond shall be authenticated by the manual countersignature of a fiscal agent of the City.

All other matters, except as provided herein, relating to such bonds, including prescribing whether manual or facsimile signatures shall appear on said bonds, prescribing the method for the recording of ownership of said bonds, appointing the fiscal agent or agents for said bonds, providing for the printing and delivery of said bonds (and if said bonds are to be executed in the name of the City by only facsimile signatures, providing for the manual countersignature of a fiscal agent or of a designated official of the City), the date, form, denominations, maturities, interest rate or rates, terms of and manner of sale and interest payment dates, place or places of payment, and also including the consolidation with other issues, shall be determined by the Commissioner of Finance. The Commissioner of Finance may elect to become the fiscal agent for the bonds, or may contract on behalf of the City for this service pursuant to the Local Finance Law. Such bonds shall contain substantially the recital of validity clause provided for in Section 52.00 of the Local Finance Law and shall otherwise be in such form and contain such recitals in addition to those required by Section 52.00 of the Local Finance Law, as the Commissioner of Finance shall determine. The Commissioner of Finance may also agree on behalf of the City to provide or disclose such information about the City as may be necessary to enable the purchasers of bonds or notes of the City to comply with Securities and Exchange Commission Rule 15c2-12.

Section 7. The temporary use of available funds of the City of Syracuse, not immediately required for the purpose or purposes for which the same were raised or otherwise created, is hereby authorized pursuant to Section 165.10 of the Local Finance Law, for the capital purposes described in Section 1 of this ordinance. The reasonably expected source of funds to be used to initially pay for the expenditures authorized by Section 1 of this resolution shall be from the City's Capital Fund. It is intended that the City shall then reimburse expenditures from the Capital Fund with the proceeds of the bonds and bond anticipation notes authorized by this

ordinance and that the interest payable on the bonds and any bond anticipation notes issued in anticipation of such bonds shall be excludable from gross income for federal income tax purposes. This ordinance is intended to constitute the declaration of the City's "official intent" within the meaning of Treasury Regulation Section 1.150-2 to reimburse the expenditures authorized by this ordinance with the proceeds of the bonds and bond anticipation notes authorized herein. Other than as specified in this ordinance, no monies are reasonably expected to be received, allocated on a long-term basis, or otherwise set aside with respect to the permanent funding of the objects or purposes described herein.

Section 8. When said bonds and notes shall have been duly sold, the same shall be delivered by the Commissioner of Finance to the purchaser upon payment to him of the purchase price, including accrued interest, and the receipt of the Commissioner of Finance shall be a full acquittance to such purchaser who shall not be obliged to see to the application of the purchase money.

Section 9. The faith and credit of the City of Syracuse are hereby pledged to the payment of the principal of said bonds and interest thereon when due. An amount sufficient to pay the principal and interest on said bonds as the same becomes due each year shall be included in the annual budget of said City for the year.

Section 10. The validity of the bonds hereby authorized may be contested only if such obligations are authorized for an object or purpose for which the City of Syracuse is not authorized to expend money, or the provisions of law which should be complied with at the date of the publication of this ordinance are not substantially complied with, and an action, suit or proceeding contesting such validity is commenced within twenty (20) days after the date of such publication, or such obligations are authorized in violation of the provisions of the Constitution.

Section 11. This ordinance shall take effect immediately.

56 ~~36~~ ~~36~~ ~~25~~ ~~23~~ 24

Ordinance No. 2022

ORDINANCE AUTHORIZING THE PURCHASE AND INSTALLATION OF NEW STATIONARY EQUIPMENT TO BE PLACED IN SCHOOL ZONES AS PART OF THE DEPARTMENT OF PUBLIC WORKS 2021/2022 RADAR SIGN PROGRAM

BE IT ORDAINED, that this Common Council hereby authorizes the purchase and installation of new stationary equipment in School Zones as part of the Department of Public Works 2021/2022 Radar Sign Program at a total cost not to exceed $30,000.00; the equipment shall include but not be limited to mobile speed trailers and variable message boards and stationary radar speed signs that will be utilized with existing School Zone beacons and posted speed reductions; and the Director of Management & Budget is hereby authorized to enter into a contract or contracts therefor in the manner provided by law; charging the cost thereof to proceeds of the sale of bonds in the amount of $30,000.00 authorized contemporaneously herewith by ordinance of this Common Council.

55-56 ~~35-36 24 25~~ 22-23 ~~23-24~~

DEPARTMENT OF PUBLIC WORKS

CITY OF SYRACUSE, MAYOR BEN WALSH

Jeremy Robinson
Commissioner

Ann Fordock
Deputy Commissioner

Martin E. Davis, L.S.
Deputy Commissioner

January 7, 2022

Ms. Patricia McBride
City Clerk
230 City Hall
Syracuse, New York 13202

Re: **2021/2022 Radar Sign Program**

Dear Ms. McBride:

Please have the following legislation prepared and placed on the next Common Council meeting agenda:

- Ordinance authorizing the sale and issuance of bonds to defray the cost of the 2021/2022 Radar Sign Program at a cost not to exceed $30,000

- Ordinance authorizing the Department of Public Works to proceed with the 2021/2022 Radar Sign Program at a cost not to exceed $30,000

These funds will be used to purchase and install new stationary equipment in School Zones. Mobile speed trailers and variable message boards will be used as spot enforcement tools in conjunction with public feedback. Stationary radar speed signs will be utilized with existing School Zone beacons and posted speed reductions. The use of this equipment allows the collection of traffic data and has shown to reduce vehicle speeds when in use.

Funds are not to exceed $30,000 and should be deposited into a Department of Public Works capital account to be determined by the Commissioner of Finance.

Very truly yours,

Jeremy Robinson

Jeremy Robinson
Commissioner of Public Works

Department of Public Works
1200 Canal St. Extension
Syracuse, N.Y. 13202

Office 315 448-2489
Fax 315 448-8531

www.syrgov.net

9

City of Syracuse

AUTHORIZATION TO PROCEED WITH CIP PROJECT

Date:	01/07/22	Department:	Public Works
Project Name:	Radar Sign Program		
Project Cost:	$30,000		
Contact Name:	Neil Milcarek-Burke		

Project Description:

The Department of Public works and the Syracuse Police Department have developed a program to share existing mobile radar speed equipment and to purchase and install new stationary equipment in School Zones. Mobile speed trailers and variable message boards will be used as spot enforcement tools in conjunction with public feedback. Stationary radar speed signs will be utilized with existing School Zone beacons and posted speed reductions. The use of this equipment allows the collection of traffic data and has shown to reduce vehicle speeds when in use.

Projected Time Line & Funding Source(s)

Estimated Start Date: Estimated Completion Date:

Funding Source:	**Dollar Amount:**
Local Share: Cash Capital	
Local Share: Bonds (complete schedule below)	30,000
State Aid/Grant (identify)	
Federal Aid/Grant (identify)	
Other (identify)	
Other (identify)	
Total Project Funding (must equal cost):$	$ 30,000

Estimated Project Borrowing Timeline

Year	Fiscal Year	Estimated Amount to Borrow
1	2022	$30,000
2		
3		
4		
5		
Total Estimated Amount to Borrow (if different than "Local Share: Bonds" above, explain)		$ $30,000

Approval to proceed with request for legislation is hereby granted.

Project in CIP Plan: Y Yes X NO

Director of Administration: _____ Date: 12 JAN 22

Director of Management & Budget: _____ Date: 1-10-22

Commissioner of Finance: _____ Date: 1/11/22

57

DEPARTMENT OF PUBLIC WORKS

CITY OF SYRACUSE, MAYOR BEN WALSH

Jeremy Robinson
Commissioner

Ann Fordock
Deputy Commissioner

Martin E. Davis, L.S.
Deputy Commissioner

March 24, 2022

Patricia K. McBride
City Clerk
City Hall, Room 231
Syracuse, NY 13202

Re: Requesting Legislation to enter into an agreement with JMT of New York INC for the scoping, design, and construction and inspection phases of the Lodi Street Striping Project (PIN 3950.72)

Dear Ms. McBride,

Please prepare legislation for the next meeting of the common council to authorize the City of Syracuse, Department of Public Works to enter into an agreement with JMT of New York INC.

In August 2021, an RFQ committee reviewed proposals for the scoping, preliminary design, final design, and construction and inspection phases of the Lodi project (PIN 3950.72.) The City received five (5) proposals and the committee unanimously selected JMT due to the firm's experience with similar projects. Based upon the Selection Committee's recommendation the City would like to enter into a contract with JMT of New York INC.

The contract will be for a period of two (2) years from the date of execution. Total amount not to exceed $122,000 and will be charged to Account 07.599807.14905.701078022 and 07.599807.14905.701078000. The project is relative to previously approved legislation (Ord. 345-21, Ord. 512-19). Total project cost not to exceed $350,000.

If you have any questions, please don't hesitate to contact me.

Dept. of Public Works
1200 Canal St. Extension
Syracuse, N.Y. 13202

Office 315 448-2489
Fax 315 448-8531

www.syrgov.net

Thank you,

Jeremy Robinson

Jeremy Robinson
Commissioner of Public Works

GROWTH. DIVERSITY. OPPORTUNITY FOR ALL.

44

OFFICE OF MANAGEMENT & BUDGET

CITY OF SYRACUSE, MAYOR BEN WALSH

Timothy M. Rudd
Director

Julie Castellitto
Assistant Director

TO: Mayor Ben Walsh
FROM: Timothy M. Rudd, Director of Management and Budget
DATE: March 25, 2022
SUBJECT: Agreement – JMT of New York INC.

On behalf of the Department of Public Works, I am requesting that the City of Syracuse enter into an agreement with JMT of New York INC.

In August 2021, an RFQ committee reviewed proposals for the scoping, preliminary design, final design, and construction and inspection phases of the Lodi project (PIN 3950.72.). The City received five (5) proposals and the committee unanimously selected JMT, Inc. due to the firm's experience with similar projects. Based upon the Selection Committee's recommendation the Department of Public Works would like to enter into a contract with JMT of New York INC.

The contract will be for two (2) years from the date of execution. Total amount not to exceed $122,000 and will be charged to Account #07.599807.14905.701078022 and 07.599807.14905.701078000. The project is relative to previously approved legislation (Ord. 345-21, Ord. 512-19). Total project cost not to exceed $350,000.

Please indicate your concurrence by signing below and returning this memo to me so that I may then forward your approval to the Common Council along with the request for authorizing this legislation.

Thank you for your attention regarding this matter.

Mayor Ben Walsh
City of Syracuse, New York

3/31/22
Date

Office of Management
and Budget
233 E Washington St
Room 213
Syracuse, N.Y. 13202

Office 315 448-8252
Fax 315 448-8116

www.syrgov.net

DEPARTMENT OF PUBLIC WORKS

CITY OF SYRACUSE, MAYOR BEN WALSH

Jeremy Robinson
Commissioner

Ann Fordock
Deputy Commissioner

Martin E. Davis, L.S.
Deputy Commissioner

March 24, 2022

Mr. Tim Rudd
Director of Management and Budget
City Hall Room 213
Syracuse, New York 13202

Re: Requesting Mayoral Approval to enter into an agreement with JMT of New York INC for the scoping, preliminary design, final design, and construction and inspection phases of the Lodi Street Striping Project (PIN 3950.72)

Dear Mr. Rudd,

Please prepare a letter to the Mayor requesting authorization for the City of Syracuse, Department of Public Works to enter into an agreement with JMT of New York INC.

In August 2021, an RFQ committee reviewed proposals for the scoping, preliminary design, final design, and construction and inspection phases of the Lodi project (PIN 3950.72.) The City received five (5) proposals and the committee unanimously selected JMT due to the firm's experience with similar projects. Based upon the Selection Committee's recommendation the City would like to enter into a contract with JMT of New York INC.

The contract will be for a period of two (2) years from the date of execution. Total amount not to exceed $122,000 and will be charged to Account 07.599807.14905.701078022 and 07.599807.14905.701078000. The project is relative to previously approved legislation (Ord. 345-21, Ord. 512-19). Total project cost not to exceed $350,000.

Upon the Mayor's approval, please submit the accompanying request for legislation to the City Clerk to have this item placed on the next Common Council Agenda.

If you have any questions, please don't hesitate to contact me.

Approved: T B Rudd Denied:_____

Date: 3-31-22

Dept. of Public Works
1200 Canal St. Extension
Syracuse, N.Y. 13202

Office 315 448-2489
Fax 315 448-8531

www.syrgov.net

Thank you,

Jeremy Robinson

Jeremy Robinson
Commissioner of Public Works

Ordinance No. 2022

BOND ORDINANCE OF THE CITY OF SYRACUSE AMENDING BOND ORDINANCE NO. 683-2019 AS LAST AMENDED BY BOND ORDINANCE NO. 280-2021 AUTHORIZING THE ISSUANCE AND SALE OF BONDS IN THE AMOUNT OF THREE MILLION EIGHTY-FIVE THOUSAND DOLLARS ($3,085,000) TO DEFRAY THE COST AND EXPENSE OF THE CONSTRUCTION AND CONSTRUCTION INSPECTION PHASES OF THE EAST COLVIN STREET PAVING PROJECT, SOUTH SALINA STREET TO JAMESVILLE AVENUE, PIN NO. 3756.82 THEREBY INCREASING THE TOTAL PROJECT COST TO $3,560,000

BE IT ORDAINED, that Bond ordinance No. 683-2019 as last amended by Bond Ordinance No. 280-2021 is hereby amended as follows:

Section 1. For the specific object or purpose of providing funds to defray the cost and expense of the Scoping, Preliminary Design, Detailed Design, Construction and Construction Inspection Phases of the East Colvin Street Paving Project, South Salina Street to Jamesville Avenue, PIN No. 3756.82 at an estimated maximum cost not to exceed Three Million Eighty-Five Thousand Dollars ($3,085,000)*, general obligation bonds of the City of Syracuse, to be of the terms, form and contents hereinafter provided for, are hereby authorized to be issued pursuant to the provisions of the Local Finance Law of the State of New York.

Section 2. Three Million Eighty-Five Thousand Dollars ($3,085,000)* is estimated as the maximum cost of the specific object or purpose for which such bonds are to be issued.

Section 3. The plan for financing such specific object or purpose consists of the issuance and sale of bonds of the City of Syracuse in the principal sum of Three Million Eighty-Five

Thousand Dollars ($3,085,000)*, thereby providing such sum for the initial cost of such specific object or purpose, with the total cost not to exceed Three Million Five Hundred Sixty Thousand Dollars ($3,560,000) for the Scoping, Preliminary Design, Detailed Design, Construction and Construction Inspection Phases of the Project.

Section 4. It is hereby determined that the specific object or purpose for which bonds are to be issued falls within subdivision 35 of paragraph (a) Section 11.00 of the Local Finance Law and the period of probable usefulness of such specific object or purpose is five (5) years.

Section 5. The Commissioner of Finance, not more than fifteen (15) days and not less than three (3) days before the sale of said bonds, shall file with the Comptroller of the State of New York a supplemental debt statement and file a duplicate thereof with the City Clerk in compliance with Section 109.00 of the Local Finance Law.

Section 6. Subject to the provisions of the Local Finance Law, the power to authorize the issuance of and to sell the bonds and bond anticipation notes in anticipation of the issuance and sale of the bonds herein authorized, including renewals of such notes, is hereby delegated to the Commissioner of Finance who is the chief fiscal officer of the City under the Local Finance Law. The Commissioner of Finance may sell such bonds at public or private sale, with or without bond insurance or other credit enhancement, at a discount or premium, at fixed or variable rates of interest or at no interest whatsoever, or as capital appreciation bonds, and with such amortization of principal as the Commissioner of Finance shall determine is most favorable to said City, and in compliance with any rules of the State Comptroller applicable thereto. Such notes shall be of such terms, form and contents, and shall be sold in such manner, as may be prescribed by said Commissioner of Finance, consistent with the provisions of the Local Finance Law. The Commissioner of Finance is hereby authorized to issue variable rate debt, acquire credit support,

and enter into such agreements as said officer finds reasonable to facilitate the issuance, sale, resale and repurchase of such bonds, as authorized under Sections 54.90 and 168.00 of the Local Finance Law. Said bonds shall be signed in the name of the City by the original or facsimile signature of the Mayor and countersigned by the original or facsimile signature of the Commissioner of Finance and sealed with the original or facsimile corporate seal of the City, provided, however, that if the signatures of the Mayor and the Commissioner of Finance are each by facsimile signatures on any bond, such bond shall be authenticated by the manual countersignature of a fiscal agent of the City. All other matters, except as provided herein, relating to such bonds, including prescribing whether manual or facsimile signatures shall appear on said bonds, prescribing the method for the recording of ownership of said bonds, appointing the fiscal agent or agents for said bonds, providing for the printing and delivery of said bonds (and if said bonds are to be executed in the name of the City by only facsimile signatures, providing for the manual countersignature of a fiscal agent or of a designated official of the City), the date, form, denominations, maturities, interest rate or rates, terms of and manner of sale and interest payment dates, place or places of payment, and also including the consolidation with other issues, shall be determined by the Commissioner of Finance. The Commissioner of Finance may elect to become the fiscal agent for the bonds, or may contract on behalf of the City for this service pursuant to the Local Finance Law. Such bonds shall contain substantially the recital of validity clause provided for in Section 52.00 of the Local Finance Law and shall otherwise be in such form and contain such recitals in addition to those required by Section 52.00 of the Local Finance Law, as the Commissioner of Finance shall determine. The Commissioner of Finance may also agree on behalf of the City to provide or disclose such information about the City as may be necessary to enable the purchasers of bonds or notes of the City to comply with Securities and Exchange Commission Rule 15c2-12.

Section 7. The temporary use of available funds of the City of Syracuse, not immediately required for the purpose or purposes for which the same were raised or otherwise created, is hereby authorized pursuant to Section 165.10 of the Local Finance Law, for the capital purposes described in Section 1 of this ordinance. The reasonably expected source of funds to be used to initially pay for the expenditures authorized by Section 1 of this resolution shall be from the City's Capital Fund. It is intended that the City shall then reimburse expenditures from the Capital Fund with the proceeds of the bonds and bond anticipation notes authorized by this ordinance and that the interest payable on the bonds and any bond anticipation notes issued in anticipation of such bonds shall be excludable from gross income for federal income tax purposes. This ordinance is intended to constitute the declaration of the City's "official intent" within the meaning of Treasury Regulation Section 1.150-2 to reimburse the expenditures authorized by this ordinance with the proceeds of the bonds and bond anticipation notes authorized herein. Other than as specified in this ordinance, no monies are reasonably expected to be received, allocated on a long-term basis, or otherwise set aside with respect to the permanent funding of the objects or purposes described herein.

Section 8. When said bonds and notes shall have been duly sold, the same shall be delivered by the Commissioner of Finance to the purchaser upon payment to him of the purchase price, including accrued interest, and the receipt of the Commissioner of Finance shall be a full acquittance to such purchaser who shall not be obliged to see to the application of the purchase money.

Section 9. The faith and credit of the City of Syracuse are hereby pledged to the payment of the principal of said bonds and interest thereon when due. An amount sufficient to pay the principal and interest on said bonds as the same becomes due each year shall be included in the annual budget

of said City for the year.

Section 10. The validity of the bonds hereby authorized may be contested only if such obligations are authorized for an object or purpose for which the City of Syracuse is not authorized to expend money, or the provisions of law which should be complied with at the date of the publication of this ordinance are not substantially complied with, and an action, suit or proceeding contesting such validity is commenced within twenty (20) days after the date of such publication, or such obligations are authorized in violation of the provisions of the Constitution.

Section 11. This ordinance shall take effect immediately.

_____ = new material

*previously read $475,000

58

DEPARTMENT OF ENGINEERING

CITY OF SYRACUSE, MAYOR BEN WALSH

Mary E. Robison, PE
City Engineer

John Kivlehan
Design & Construction

Kelly Haggerty
Public Buildings

Marc Romano
Mapping & Surveying

25 March 2022

Ms. Patricia K. McBride
Office of the City Clerk
231 City Hall
Syracuse, New York 13202

Request for Legislation: An Ordinance Amending Ordinance No. 683 of 2019 as last amended by Ordinance No. 280 of 2021 Authorizing the Issuance and Sale of Bonds to Provide Funds for the Preliminary Design and Detailed Design Phases of the East Colvin Street Paving Project, South Salina Street to Jamesville Avenue, PIN 3756.82. Amend to Authorize Bonding for the Construction and Construction Inspection Phase of the Project.

Dear Ms. McBride:

Please prepare the following legislation for the next meeting of the Syracuse Common Council:

An ordinance amending Ordinance No. 683 of 2019 as last amended by Ordinance No. 280 of 2021 authorizing the issuance and sale of bonds to provide funds for the preliminary and detailed design phases of the East Colvin Street Paving Project, South Salina Street to Jamesville Avenue, PIN 3756.82. Amend to authorize bonding for the Construction and Construction Inspection Phase, increasing the bonding amount by $3,085,000.00 for a total project cost not to exceed $3,560,000.00.

The City is expected to incur all initial costs for this project, with subsequent 80% reimbursement from the Federal government through the Transportation Improvement Program (TIP). The City is receiving 15% State Marchiselli funding for the design phase of this project, but Marchiselli funds are not yet allocated for the Construction and Construction Inspection phase of the project. Costs will be charged to Capital Account No. 07.599807.701077100.80405.

Please let me know if you have any questions relative to this request.

Very Truly Yours,

Mary E. Robison

Mary E. Robison, P.E.,
City Engineer

Dept. of Engineering
233 E. Washington St.
City Hall, Room 401
Syracuse, N.Y. 13202
Office 315 448-8200
Fax 315 448-8488

www.syrgov.net

GROWTH. DIVERSITY. OPPORTUNITY FOR ALL.

41

City of Syracuse

AUTHORIZATION TO PROCEED WITH CIP PROJECT

Date:	03/18/22	Department:	Engineering
Project Name:	**East Colvin Street Paving Project, South Salina Street to Jamesville Avenue, PIN 375682**		
Project Cost:	$3,560,000.00		
Contact Name:	Mary E. Robison		
Project Description:	Mill & Pave and associated Right of Way improvements		

Projected Time Line & Funding Source(s)

Estimated Start Date: Winter 2019 Estimated Completion Date: I summer 2023

Funding Source:			**Dollar Amount:**
Local Share: Cash Capital			
Local Share: Bonds (complete schedule below)		$	640,750.00
State Aid/Grant (identify)	Marchiselli	$	71,250.00
Federal Aid/Grant (identify)	TIP Funding Reimbursement	$	2,848,000.00
Other (identify)			
Other (identify)			
	Total Project Funding (must equal cost):	$	3,560,000.00

Estimated Project Borrowing Timeline

Year	Fiscal Year	Estimated Amount to Borrow
1	2019	$246,000.00
2	2021	$229,000.00
3	2022	$3,085,000.00
4		
5		
Total Estimated Amount to Borrow (if different than "Local Share: Bonds" above, explain)		$ 3,560,000.00

The City is expected to incur all initial costs for this project with subsequent 80% reimbursement from the Federal government through the Transportation Improvement Program (TIP).

Approval to proceed with request for legislation is hereby granted.

Project in CIP Plan: Yes X No Reason("No"):

Director of Administration: _____ Date: 7MAR2022

Director of Management & Budget: _____ Date: 4-6-22

Commissioner of Finance: _____ Date: 4/7/22

Ordinance No. 2022

ORDINANCE AMENDING ORDINANCE NO. 684-2019 AS LAST AMENDED BY ORDINANCE NO. 281-2021 AUTHORIZING AN AGREEMENT WITH THE NEW YORK STATE DEPARTMENT OF TRANSPORTATION RELATIVE TO FUNDING FOR THE SCOPING AND PRELIMINARY DESIGN AND DETAILED DESIGN PHASES OF THE EAST COLVIN STREET PAVING PROJECT, SOUTH SALINA TO JAMESVILLE AVENUE, PIN 3756.82 TO ADD THE CONSTRUCTION AND CONSTRUCTION INSPECTION PHASES OF THE PROJECT AT A COST NOT TO EXCEED $3,085,000 THEREBY INCREASING THE TOTAL PROJECT COST TO $3,560,000

BE IT ORDAINED, that Ordinance No. 684-2019 as last amended by Ordinance No. 281-2021 is hereby amended as follows:

WHEREAS, the City Engineer has requested legislation authorizing the Mayor to enter into an agreement with the New York State Department of Transportation (NYSDOT) relative to funding for the Scoping and Preliminary Design, Detailed Design, Construction and Construction Inspection Phases of the East Colvin Street Paving Project, South Salina Street to Jamesville Avenue, PIN 3756.82 (hereinafter referred to as the "Project") at a total cost not to exceed $3,560,000 * to be initially funded with bond proceeds with repayment expected to be funded from subsequent reimbursement of 80% received from Federal funds through the Transportation Improvement Program, 15% Marchiselli funding for the design phases of the Project, and the remaining cost being the local share; NOW, THEREFORE,

BE IT ORDAINED, subject to the approval of the Mayor, that the Mayor be and he is hereby authorized to enter into an agreement with the New York State Department of

Transportation relative to funding for the Project at a total cost not to exceed $3,560,000* ($246,000 for Scoping and Preliminary Design Phase, $229,000 for the Detailed Design Phase, and $3,085,000 for the Construction and Construction Inspection Phases). The City is expected incur all initial costs for the Project with subsequent 80% reimbursement from the Federal Government through the Transportation Improvement Program (TIP), 15% Marchiselli funding for the design phases of the Project, and the remaining cost being the local share; and

BE IT FURTHER ORDAINED, that said agreement shall contain such other terms and conditions as the Corporation Counsel shall deem in the best interest of the City of Syracuse; and

BE IT FURTHER ORDAINED, that the Common Council hereby authorizes the City of Syracuse to pay in the first instance the full Federal and non-federal share of the cost of the scoping, preliminary design, detailed design, construction and construction inspection phases for the Project or portions thereof, if necessary; and

BE IT FURTHER ORDAINED, that the Mayor of the City of Syracuse be and is hereby authorized to execute all necessary Agreements, certifications or reimbursement requests on behalf of the City of Syracuse with the NYSDOT in connection with the advancement or approval of the Project and providing for the administration of the Project and the municipality's first instance funding of the non-federal share of Project costs and permanent funding of the local share of federal-aid and state-aid eligible Project costs and all Project costs within appropriations therefore that are not so eligible, if necessary; and

BE IT FURTHER ORDAINED, that a certified copy of this Ordinance be filed with the New York State Commissioner of Transportation by attaching it to any necessary Agreement in connection with the Project; and

BE IT FURTHER ORDAINED, that this Ordinance shall take effect immediately.

_____=new material

*previously read: $475,000

59

DEPARTMENT OF ENGINEERING

CITY OF SYRACUSE, MAYOR BEN WALSH

Mary E. Robison, PE
City Engineer

John Kivlehan
Design & Construction

Kelly Haggerty
Public Buildings

Marc Romano
Mapping & Surveying

25 March 2022

Mr. Patricia K. McBride
Office of the City Clerk
231 City Hall
Syracuse, New York 13202

Request for Legislation: An Ordinance Amending Ordinance No. 684 of 2019 as last amended by Ordinance No. 281 of 2021 Authorizing the Mayor to Enter into an Agreement with the New York State Department of Transportation for the Preliminary and Detailed Design Phases of the East Colvin Street Paving Project, South Salina Street to Jamesville Avenue, PIN 3756.82. Amend to Authorize the Construction and Construction Inspection Phase of the Project.

Dear Ms. McBride:

Please prepare the following legislation for the next meeting of the Syracuse Common Council:

An ordinance amending Ordinance No. 684 of 2019 as last amended by Ordinance No. 281 of 2021 authorizing the Mayor to enter into an Agreement with the New York State Department of Transportation for the Preliminary and Detailed Design Phases of the East Colvin Street Paving Project, South Salina Street to Jamesville Avenue, PIN 3756.82. Amend to authorize the Construction and Construction Inspection Phase, increasing the amount by $3,085,000.00 for a total project cost not to exceed $3,560,000.00.

The City is expected to incur all initial costs for this project, with subsequent 80% reimbursement from the Federal government through the Transportation Improvement Program (TIP). The City is receiving 15% State Marchiselli funding for the design phases of this project, but Marchiselli funds are not yet allocated for the Construction and Construction Inspection phase of the project. Costs will be charged to Capital Account No. 07.599807.701077100.80405.

Please let me know if you have any questions relative to this request.

Very Truly Yours,

Mary E. Robison

Mary E. Robison, P.E.,
City Engineer

Dept. of Engineering
233 E. Washington St.
City Hall, Room 401
Syracuse, N.Y. 13202
Office 315 448-8200
Fax 315 448-8488

www.syrgov.net

GROWTH. DIVERSITY. OPPORTUNITY FOR ALL.

60

Ordinance No. 2022

ORDINANCE AMENDING ORDINANCE NO. 685-2019 AS LAST AMENDED BY ORDINANCE NO. 282-2021 AUTHORIZING THE ENGINEERING SERVICES AND CONSTRUCTION NEEDED FOR THE SCOPING AND PRELIMINARY DESIGN, DETAILED DESIGN, CONSTRUCTION AND CONSTRUCTION INSPECTION PHASES OF THE EAST COLVIN STREET PAVING PROJECT, SOUTH SALINA STREET TO JAMESVILLE AVENUE, PIN NO. 3756.82

BE IT ORDAINED, that Ordinance No. 685-2019 as last amended by Ordinance No. 285-2021 is hereby amended as follows:

BE IT ORDAINED, that this Common Council hereby authorizes the engineering services and construction needed for the Scoping and Preliminary Design, Detailed Design, Construction and Construction Inspection Phases of the East Colvin Street Paving Project, South Salina Street to Jamesville Avenue, PIN No. 3756.82 at a total cost not to exceed $3,560,000.00* ($246,000 for Scoping and Preliminary Design Phase, $229,000 for the Detailed Design Phase, and $3,085,000 for the Construction and Construction Inspection Phases); and the Director of Management & Budget is hereby authorized to enter into a contract or contracts therefor in the manner provided by law; professional services for the project shall be obtained in accordance with Section 5-205A (8) of the Syracuse City Charter; charging the cost thereof to proceeds of the sale of bonds in the amount of $3,085,000.00 authorized contemporaneously herewith by ordinance of this Common Council.

_____ = new material

*previously read: $475,000

DEPARTMENT OF ENGINEERING

CITY OF SYRACUSE, MAYOR BEN WALSH

Mary E. Robison, PE
City Engineer

John Kivlehan
Design & Construction

Kelly Haggerty
Public Buildings

Marc Romano
Mapping & Surveying

25 March 2022

Ms. Patricia K. McBride
Office of the City Clerk
231 City Hall
Syracuse, New York 13202

Request for Legislation: An Ordinance Amending Ordinance No. 685 of 2019 as last amended by Ordinance No. 282 of 2021 Authorizing the Preliminary and Detailed Design Phases of the East Colvin Street Paving Project, South Salina Street to Jamesville Avenue, PIN 3756.82. Amend to Authorize the Construction and Construction Inspection Phase of the Project.

Dear Ms. McBride:

Please prepare the following legislation for the next meeting of the Syracuse Common Council:

An ordinance amending Ordinance No. 685 of 2019 as last amended by Ordinance No. 282 of 2021 authorizing the Preliminary and Detailed Design phases of the East Colvin Street Paving Project, South Salina Street to Jamesville Avenue, PIN 3756.82. Amend to authorize the Construction and Construction Inspection Phase increasing the amount by $3,085,000.00 for a total project cost not to exceed $3,560,000.00.

The City is expected to incur all initial costs for this project, with subsequent 80% reimbursement from the Federal government through the Transportation Improvement Program (TIP). The City is receiving 15% State Marchiselli funding for the design phases of this project, but Marchiselli funds are not yet allocated for the Construction and Construction Inspection phase of the project. Costs will be charged to Capital Account No. 07.599807.701077100.80405.

Please let me know if you have any questions relative to this request.

Very Truly Yours,

Mary E. Robison

Mary E. Robison, P.E.,
City Engineer

Dept. of Engineering
233 E. Washington St.
City Hall, Room 401
Syracuse, N.Y. 13202
Office 315 448-8200
Fax 315 448-8488

www.syrgov.net

GROWTH. DIVERSITY. OPPORTUNITY FOR ALL.

Ordinance No. 2022

ORDINANCE DIRECTING PUBLIC HEARING OF THE PROPOSED COMBINED 2022/2023 CITY AND SCHOOL DISTRICT BUDGET

BE IT ORDAINED, that pursuant to the Charter of the City of Syracuse--1960 and of any local law, act or acts amendatory thereof, this Common Council hereby fixes May 2, 2022, at 5:30 p.m. of that day as the time, for a public hearing to be held in the Common Council Chambers, Third Floor City Hall, 233 East Washington Street, Syracuse, New York 13202, in reference to the annual estimate of the City of Syracuse and City School District for 2022/2023 submitted to the Common Council on or prior to April 8, 2022, by the Mayor of said City, and in reference to the addition of one per cent (1%) of the aggregate amount thereof pursuant to law; and

BE IT FURTHER ORDAINED, that the City Clerk shall arrange for a stenographer to transcribe the public hearing; and

BE IT FURTHER ORDAINED, that the City Clerk be and he hereby is directed to cause a copy of this ordinance to be published in the official newspapers of the City on or prior to April 24, 2022; and

BE IT FURTHER ORDAINED, that the public notice shall be in substance as follows:

NOTICE IS GIVEN that citizens attending the hearing have the right to provide written and oral comments and to ask questions. A summary of the Budget document is scheduled for publication in the April 24, 2022 edition of the Syracuse Post Standard.

A copy of the combined 2022/2023 City and School District budget is available for public inspection at the following location: Office of the City Clerk, 230 City Hall, Syracuse, New York, 13202, during regular business hours, 8:30 a.m. to 4:30 p.m., Monday through Friday, and on the City of Syracuse website.

NOTICE IS FURTHER GIVEN that in accordance with the provisions of 31 CFR Part 51, the City of Syracuse does not discriminate on the basis of disability in admission or access to or treatment or employment in its programs and activities.

Persons with disability requiring special accommodations in visiting a City office, receiving a City service, or participating in a City program should contact: Bianca Tearney, Personnel & Labor Relations, Room 312, 233 East Washington Street, Syracuse, New York, 448-8780, or the Office of Budget Administration, 213 City Hall, Syracuse, New York, 448-8252, for information and appropriate arrangements.

Pursuant to Section 51.55(d), Bianca Tearney, Multi-Cultural Affairs/Diversity Specialist, Personnel & Labor Relations, Room 312, 233 East Washington Street, Syracuse, New York, 448-8780, has been designated to coordinate City of Syracuse compliance with the provisions of 31 CFR Part 51.

61

Common Council Office
314 City Hall
Syracuse, N.Y. 13202

Council Office: (315) 448-8466
Fax: (315) 448-8423

CITY OF SYRACUSE COMMON COUNCIL

MICHAEL GREENE
Councilor-at-Large

April 4, 2022

Ms. Patricia K. McBride
City Clerk
City Hall, Room 231
Syracuse, New York 13202

Dear Ms. McBride,

Please prepare legislation for the April 11, 2022 Common Council Meeting Waiver Agenda to advertise a Public Hearing relative to the 2022-2023 Annual City Estimate of the City of Syracuse and the Syracuse City School District.

The Public Hearing will be held on Monday, May 2, 2022 at 5:30 p.m. in the Common Council Chambers, third floor, City Hall.

Thank you for your assistance in this regard.

Sincerely,

Michael Greene/amg

Michael Greene
Councilor-at-Large
Chairperson, Finance Taxation & Assessment

609 Cumberland Avenue · Syracuse, N.Y. 13210 · mgreene@syrgov.net

62

OFFICE OF MANAGEMENT & BUDGET

CITY OF SYRACUSE, MAYOR BEN WALSH

Timothy M. Rudd
Director

Julie Castellitto
Assistant Director

April 4, 2022

Ms. Patricia McBride
City Clerk
City Hall
Syracuse, New York

Re: Request for Legislation – Approval of 2022-2023 Annual City Budget Proposal

Dear Ms. McBride,

Please prepare the necessary legislation to be introduced at the next Common Council meeting authorizing approval of the 2022-2023 proposed budget for the City of Syracuse and the Syracuse City School District.

Thank you.

Sincerely,

Timothy M. Rudd
Director of Management and Budget

Office of Management
and Budget
233 E Washington St
Room 213
Syracuse, N.Y. 13202

Office 315 448-8252
Fax 315 448-8116

www.syrgov.net

GROWTH. DIVERSITY. OPPORTUNITY FOR ALL.

SC